PRODUCED BY THE OPERATIONS DIRECTORATE OF ENERGY NETWORKS ASSOCIATION

Engineering Recommendation EREC S34

Draft Issue 3 2016

A GUIDE FOR ASSESSING THE RISE OF EARTH POTENTIAL AT ELECTRICAL INSTALLATIONS

www.energynetworks.org

© 2014 Energy Networks Association

All rights reserved. No part of this publication may be reproduced, stored in a retrieval system or transmitted in any form or by any means, electronic, mechanical, photocopying, recording or otherwise, without the prior written consent of Energy Networks Association. Specific enquiries concerning this document should be addressed to:

Operations Directorate
Energy Networks Association
6th Floor, Dean Bradley House
52 Horseferry Rd
London
SW1P 2AF

This document has been prepared for use by members of the Energy Networks Association to take account of the conditions which apply to them. Advice should be taken from an appropriately qualified engineer on the suitability of this document for any other purpose.

<Insert publication history here, e.g. “First published, December, 2011”>

Amendments since publication

Issue	Date	Amendment
Issue D1	12-2013	First draft in ENA template for comment within working group. .pdf version will be used to collate comments.
Issue D2	11-2014	Second draft in ENA template for further development by ENA working group and to prompt comments.

Contents

Introduction 9
1. Scope 9
2. Normative references 9
3. Terms and definitions 10
3.1 Symbols used 10
3.2 Formulae used for calculating earth installation resistance for earthing studies 10
3.3 Description of system response during earth fault conditions 11
4. Earth fault current studies 13
4.1 Earth fault current 13
4.2 Fault current analysis for multiple earthed systems 13
4.3 Induced currents in parallel conductors 13
4.3.1 Simple circuit representation for initial estimates 14
4.3.2 More realistic circuit representation to improve the accuracy of calculations 14
4.3.3 Amending calculations to account for increased ground return current in single core circuits that are not in flat or trefoil touching arrangement 15
5. Calculations associated with external and internal impact of the EPR 16
5.1 Calculation of touch potentials 16
5.2 Calculation of external impact zones 16
5.2.1 External step potential 16
5.2.2 Potential contours 17
5.3 Transfer potential to LV systems where the HV and LV earthing are separate 17
5.3.1 Background [keep theory here and put examples in appendix] 17
5.3.2 Examples .....**Error! Bookmark not defined.**
5.3.3 Discussion .....**Error! Bookmark not defined.**
5.3.4 Application to real systems .....**Error! Bookmark not defined.**
5.4 Risk assessment methodology 20
5.5 Methods of optimising the design (first draft) 20
5.5.1 More accurate evaluation of fault current 20
5.5.2 Reducing the overall earth impedance 20
5.5.3 Reducing the touch potential within the installation 20
6.0 Case study examples 21
6.1 Case Study 1: Overhead line fed 33kV substation (33kV fault at Substation B) 21
6.1.1 Earth resistance calculations 22
6.1.2 Calculation of Fault Current and Earth Potential Rise 25
6.1.4 Calculation of touch potentials 26
6.1.4.1 External touch potential at the edge of the electrode 27

6.1.4.2 Touch potential on fence 28
6.1.3 Calculation of external voltage impact contours 28
6.2 Case study 2 (33kV fault at substation B) 29
6.2.1 Resistance calculations....29
6.2.2 Calculation of Fault Current and Earth Potential Rise....29
6.3 Case study 3 (33kV fault at Substation B, fed from a mixed cable and OHL circuit)....31
6.3.1 Resistance calculations [font]....31
6.3.1 Calculation of Fault Current and Earth Potential Rise....31
6.4 Case study 4 (Multiple neutrals)....34
6.4.1 Introduction 34
6.4.2 Case Study Arrangement....34
6.4.3 Case study data 35
6.4.4 Treatment of neutral current....36
6.4.5 Fault current distribution....36
6.4.6 Earth potential rise 37
6.5 Case study 5 (11kV Substation and LV earthing interface) 38
6.5.1 Design Option 1 38
6.5.2 Design Option 2 40
APPENDICES 42
APPENDIX A – Symbols used within formulae....43
APPENDIX B – Formulae....46
Formula R1 Rod electrode 46
Formula R2 Plate electrode (mainly used for sheet steel foundations)....46
Formula R3 Ring electrode 46
Formula R4 Grid/mesh resistance....46
Formula R5 Group of rods around periphery of grid 47
Formula R6 Combined grid and rods (rods on outside only) 48
Formula R7 Strip/tape electrode 48
include resistivities in legend....49
Figure XXX – to be introduced to group for comment. Move to Appendix F or keep here? Additional resistivities to be plotted?....49
Formula R8 Ladder networks....50
Formula R9 Accounting for proximity effects....51
Formula R10 Overall earth resistance....52
Formula C1 Current rating formula....52
Formula P1 External touch potential at the edge of the electrode 54
Formula P2 External ‘Touch’ potential at the fence 55
Formula P3 External touch potential at fence with external buried peripheral....55
Formula P4 Touch voltage within grid (from IEEE80)....56
Formula P5 Step voltage on outside edge of grid....56
Formula P6 Voltage profile around earth electrode 57
Formula P7 Calculation of specific external potential contours....58

APPENDIX C – Earthing design methodology 59

APPENDIX D – Formulae for determination of ground return current for earth faults on metal sheathed cables 59

APPENDIX E – Ground current for earth faults on steel tower supported circuits with an aerial earthwire 67

APPENDIX F – Chart to calculate resistance of horizontal electrode 68

APPENDIX G – Chain impedance of standard 132kV earthed tower lines 69

APPENDIX H – Sample calculations showing the effect on the ground return current for change in the separation distance between three single core cables laid flat or in trefoil 70

APPENDIX I – Transfer potential to distributed LV systems 76

6.5.1 Background 76

6.5.2 Basic theory [possibly re-introduce the theory into the body]**Error! Bookmark not defined**

6.5.3 Worked example 78

Bibliography 81

Figures

Figure 3.1 Earth fault at an installation which has an earthed tower line supply 11
Figure 3.2 Equivalent circuit for analysis 12
Figure 5.3 Example – Two Electrodes of Equal Resistance..... **Error! Bookmark not defined.**
Figure 5.4 Example - Two Electrodes of Unequal Resistance . **Error! Bookmark not defined.**
Figure 6.1 Supply arrangement for case study 1 21
Figure 6.2 Substation B basic earth grid 22
Figure 6.3 Substation B basic earth grid and rods 23
Figure 6.4 Substation B earth grid with rods and rebar 24
Figure 6.5 Supply arrangement for case study 2 29
Figure 6.6 Supply arrangement for case study 3 31
Figure 6.7 Case study arrangement 35
Figure A8.1 Cross-sectional view for Cable 3 71
Figure A8.2 Circuit used for analysis purposes 71
Figure A8.3 Ground return current (I_{ES}) as a percentage of (I_F) against circuit length for difference 132kV cable installation arrangements 72
Figure A8.4 Ground return current (I_{ES}) as a percentage of (I_F) against circuit length for different 11kV cable installation arrangements 73
Figure 5.1 Surface potential near a simple HV and LV electrode arrangement **Error! Bookmark not defined**
Figure 5.2 Equivalent Circuit for Combined LV Electrodes A & B **Error! Bookmark not defined.**
TablesTable 6.3 EPR for different grid arrangements 26
Table 6.3 Fault current versus substation earth resistance (all cable circuit) **Error! Bookmark not defined.**
Table 6.4 Case study 2, input data and results 30
Table 6.5 Case study 3, input data and results for end part of circuit 32
Table 6.6 Case study 3, input data and results for start part of circuit 32
Table 6.7 Case study short-circuit data 35
Table 6.8 Total three times zero sequence current ($3I_O$) 36
Table 6.9 Case study information for fault current distribution calculations 37
Table 6.10 Calculated ground return current 37
Table A2.1 Approximate effective lengths for a single earthwire, tape or PILCSWA cable 49
Table A2.2 Proximity effect of electrodes run in parallel (calculated using computer software) 52
Table A4.1 Self and mutual impedances for a sample of distribution cables 65
Table A8.1 Technical details of cables modelled 70
Table A8.2 The geometric placement of cables 70
Table A8.3 Effect of physical cable arrangement on ground return current I_{ES} for 132 kV cables 74
Table A8.4 Effect of physical cable arrangement on ground return current I_{ES} for 11kV cables 74

Foreword

This Engineering Recommendation (EREC) is published by the Energy Networks Association (ENA) and comes into effect from <Month, 2014>. It has been prepared under the authority of the ENA Engineering Policy and Standards Manager and has been approved for publication by the ENA Electricity Networks and Futures Group (ENFG). The approved abbreviated title of this engineering document is “EREC S34”, which replaces the previously used abbreviation “ER EREC S34”.

150

This page has been left blank

Introduction

This Engineering Recommendation is the technical supplement to TS 41-24 (2014), providing formulae, guidelines and examples of the calculations necessary to estimate the technical parameters associated with Earth Potential Rise (EPR).

TS 41-24 provides the overall rules, the design process, safety limit values and links with legislation and other standards.

1. Scope

This document describes the basic design calculations and methods used to analyse the performance of an earthing system and estimate the earth potential rise created, for the range of electrical installations within the electricity supply system in the United Kingdom, as catered for in TS 41-24. Modification to the calculations and methods may be necessary before they can be applied to rail, industrial and other systems.

2. Normative references

ENA TS 41-24 contains the main list of reference documents. Only reference documents used for EREC S34 and not listed in TS 41-24 are shown below.

Standards:

BS EN 50522: 2010: Earthing of power installations exceeding 1kV a.c.

ENA TS 41-24 (2016): Guidelines for the Design, Installation, Testing and Maintenance of Main Earthing Systems in Substations.

BS EN 60909-3: Short-circuit currents in three-phase a.c. systems. Currents during two separate simultaneous line-to-earth short-circuits and partial short-circuit currents flowing through earth

Other publications

To be added later • Align with bibliography

3. Terms and definitions

3.1 Symbols used

Symbols or a similar naming convention to BS EN 50522 have been used and they are set out in Appendix A. Where these differ from the symbols used in earlier versions of this document, the previous symbols are shown alongside the new ones, to assist when checking previous calculations and formulae.

3.2 Formulae used for calculating earth installation resistance for earthing studies

The most common formulae for power installations are included in Appendix B. These are generally used to calculate the resistance of an earth electrode system comprising of horizontal and/or vertical components or potentials at points of interest.

When using formulae, to calculate earth resistances, caution is necessary, because they do not normally account for proximity effects or the longitudinal impedance of conductors.

For first estimates, the overall impedance Z_E of separate electrodes with respect to reference earth, is taken as the sum of their separate values in parallel. For the example shown in Figure 3.1, this would be:

$$Z_E = \left(\frac{1}{R_{ES}} + \frac{1}{Z_{CH1}} + \frac{1}{Z_{CH2}} + \cdots\right)^{-1}$$

(see Appendix A for description of symbols used)

In reality, Z_E will be higher if the separate electrodes are close enough that there is significant interaction between them (proximity effect).

Proximity effects can be accounted for in most advanced software packages. When relying on standard formulae, the following techniques can help to account for proximity when calculating Z_E:

- Include any radial electrodes that are short in relation to the substation size, into the overall calculation of the earth grid resistance.
- For radial spur electrodes or cables with an electrode effect, assume the first part of its length is insulated over a distance similar to the substation equivalent diameter. Calculate the earth resistance of the remainder of the electrode/cable and add the longitudinal impedance of the insulated part in series.
- For a tower line, assume that the line starts after one span of overhead earthwire (the longitudinal impedance of this earthwire/span would be placed in series with the tower line chain impedance).

A value of soil resistivity is needed and for the formula in Appendix B, this must be a uniform equivalent (see TS 41-24, Section 8.1.) For soils that are clearly of a multi-layer structure with significant resistivity variations between layers, the formulae must be used with caution and it is generally better to use dedicated software that accounts for this to provide results of the required level of accuracy.

3.3 Description of system response during earth fault conditions

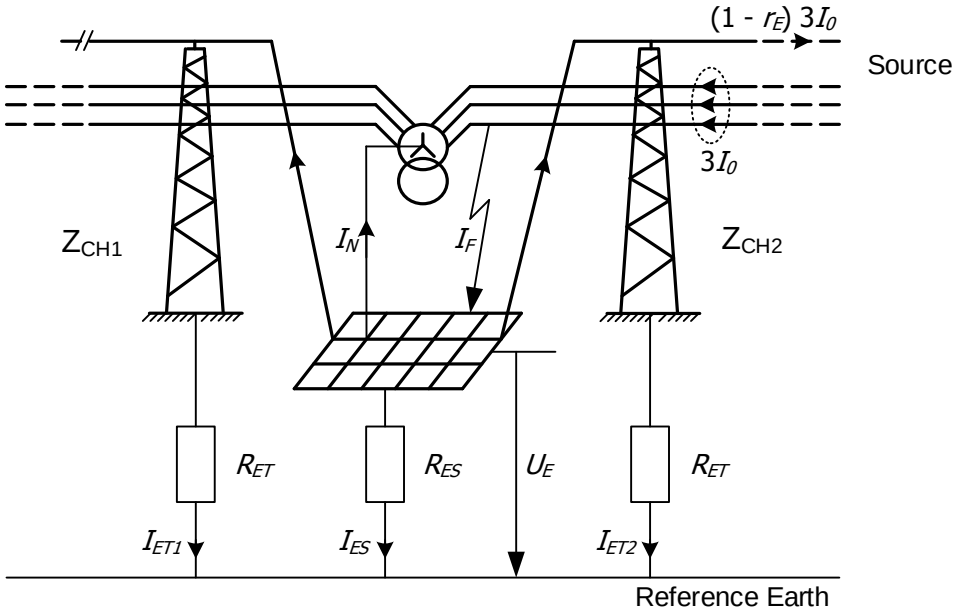

Figure 3.1 Earth fault at an installation which has an earthed tower line supply

The arrangement shown in Figure 3.1 is based upon the example described in BS EN 50522 and will be explained and developed further in this document. The EPR is the product of earth electrode impedance and the current that flows through it into the soil and back to its remote source. The description below is to show how the fault current and associated impedances are dealt with to arrive at the components that are relevant to the EPR.

The installation is a ground-mounted substation that is supplied or looped into an overhead line circuit that is supported on steel towers and has an over-running earthwire. In this simplified example, for clarity currents are shown only on one of the infeed circuits, and flow in one earth wire only. It is also assumed that each tower line supports only one (three phase) circuit.

The fault condition is a high voltage phase insulation failure to earth within the substation. It is possible to model this situation with computer software such that all of the effects are summated, calculated and results presented together. For traditional analysis in this standard, the effects are decoupled as described below.

The total earth fault current at the point of fault (I_F) that will flow into the earth grid and associated components would be reduced initially by two components.

- The first component is that passing through the transformer star point earth connection (I_N) and returning to source via the unfaulted phase conductors. For systems that are normally multiply earthed, i.e. at 132kV and above, the total current excluding the I_N component is normally calculated by summating the currents in all three phases ($3I_0$) vectorially. The process is further described in Case Study 4. For lower voltage distribution systems, I_N is normally zero or sufficiently low to be ignored in calculations.

The second reduction is due to coupling between the faulted phase and continuous earth conductor (see 4.3 below.) This part of the current is normally pre-calculated for standard line arrangements or can be individually calculated from the support structure geometry, conductor cross section and material. A similar procedure is

followed for a buried cable. Another approach is to use a reduction factor (termed r_E) based on the specific circuit geometry and material.

Once these components have been removed, the situation is shown in Figure 3.2. The earth current (I_E) is treated as flowing into the earth network, which in this example contains the substation earth grid (resistance R_{ES}) and two 'chain impedances', of value Z_{CH1} and Z_{CH2}. The two chain impedances are each a ladder network consisting of the individual tower footing resistance R_{ET} in series with the longitudinal impedance of each span of earthwire. They are treated as being equal if they have more than 20 similar towers in series and are in soil of similar resistivity. The overall impedance of the electrode network is Z_E and the current (I_E) flowing through it creates the Earth Potential Rise (U_E).

The analysis of the performance of the system described follows the process shown in the design flow diagram (Appendix C.) The case studies in section 6 illustrate this process for a number of examples of increasing complexity.

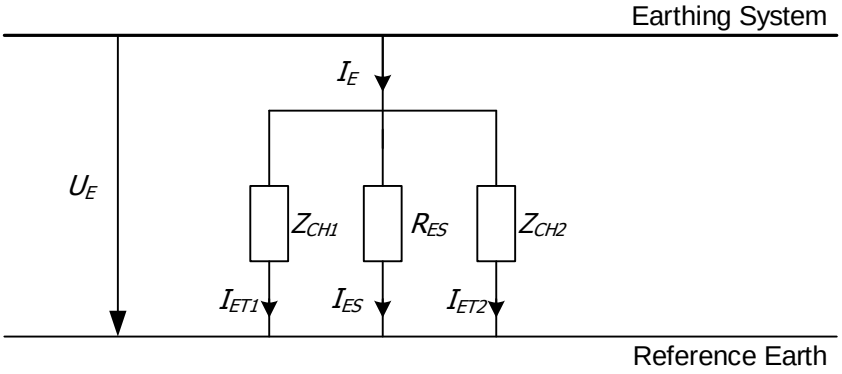

Figure 3.2 Equivalent circuit for analysis

4. Earth fault current studies

This section describes how to use the fault current data (calculated using the methodology set out in BS EN 60909 and guidance from TS 41-24, Section 8.2) for earth potential rise purposes.

4.1 Earth fault current

Source earth fault current values (such as the upper limit with neutral earth resistors in place) may be used for initial feasibility studies, but for design purposes, the value used should be site specific, i.e. should account for the fault resistance and longitudinal phase impedance between the source and installation.

Once the fault current is known, the clearance time for a “normal protection” operation (as defined in TS 41-24), at this level of current should be determined and the applicable safety voltage limits obtained from TS 41-24, Section 6. This basis of a normal protection operation is used for the personnel protection assessment. Design measures should be included within installations to afford a higher level of protection to personnel in the event of a main protection failure.

For protection and telecommunication equipment immunity studies in distribution systems, the steady state RMS fault current values are normally used. At some installations, particularly where there are significant generation in-feeds, consideration should be given to sub-transient analysis. This is especially important where vulnerable equipment (such as a telephone exchange) is installed close to a generation installation.

For calculation of the EPR, it is the ground return component of the fault current (I_E) that is of concern. On some transmission systems, this can be greater for a phase-phase-earth fault (compared to a straightforward phase-earth fault) and where applicable, this value should be used for the EPR calculation.

4.2 Fault current analysis for multiple earthed systems

The methodology followed in this document assumes that the earth fault current at the substation (possibly at a defined point in the substation) has been separately calculated using power system analysis tools, symmetrical components or equivalent methods. Depending upon the complexity of the study, the data required may be a single current magnitude or the three phase currents in all supply circuits in vector format.

4.3 Induced currents in parallel conductors

The alternating current that flows in a conductor (normally a phase conductor) will create a longitudinal emf in conductors that lie in parallel with it. These are typically cable metal screens (lead sheath, steel armour or copper strands), earthwires laid with the circuit, metal pipes, traction rails or the earthwires installed on overhead lines. This emf will increase from the point of its earth connection as a function of the length of the parallelism and other factors (such as the separation distance.) If the remote end of the parallel conductor is also connected to earth, then a current will circulate through it, in the opposite general direction to the inducing current.

The current that flows (returns) via the cable sheath or earthwire during fault conditions can be large and it has the effect of reducing the amount of current left to flow into the ground via the electrode system, resulting in a reduced EPR on it.

The following sections provide methods to account for these return currents.

4.3.1 Simple circuit representation for initial estimates

For an overhead line with a single earthwire, or a single cable core and its earth sheath, the formulae below approximate the ground return current (I_E). The main assumption is that the circuit is long enough such that the combined value of the earthing resistances at each end of the line are small compared with z_s, or for cable, small compared with r_c.

For an overhead line:

$$I_E = k(I_F - I_N) \quad \text{where } k = \left(1 - \frac{z_{mp,s}}{z_s}\right)$$

Appendix E gives calculated values of I_E presented as a percentage value of I_F, and phase angle with respect to I_F for a range of the most commonly used overhead line constructions at 132 kV, 275 kV and 400 kV.

For a single core cable:

$$I_E = k(I_F - I_N) \quad \text{where } k = \left(\frac{r_c}{z_c}\right)$$

The equations are not sufficiently accurate for short circuits (less than 1km) and the results are sensitive to low values of terminal resistance.

4.3.2 More realistic circuit representation to improve the accuracy of calculations

More complete formulae are presented in Appendix D. They require a number of circuit and cable specific factors to provide sufficiently accurate results. These have been included in Table A4.1 (Appendix D), for a representative sample of cables.

The case studies have been selected to show how to use the formulae and calculations for a range of different scenarios. The calculations generally provide results that are conservative, because parallel circuit earthwires or cables are not included in the circuit factors. The parallel earthwires or cables can be included in the circuit factors and their use in the formulae of Appendix D will then provide more accurate results.

Where single core cables are used for three phase circuits, the calculations are based upon them being installed in touching trefoil formation, earthed at each end. Where the cables are not in this arrangement, the results may be optimistic and correction factors need to be considered, (see. 4.3.3 and Appendix H.)

The formulae and calculations are sufficiently accurate for use at 11kV and 33kV on radial circuits. Circuit factors have not been included for 66kV cables because so little of this is present within DNOs, typically only for initial lengths of predominantly overhead line circuits. First estimates for these cables can be made using a similar 33kV cable.

At 132kV, the formulae and calculations are sufficiently accurate for use in feasibility studies, especially for single end fed “all cable” circuits. They should normally provide conservative results. This is because the circuit factors calculated are for the cable construction that provides the highest ground return current, due for example to having the highest longitudinal sheath impedance and/or weakest mutual impedance between the faulted and return conductors. This would result from a cable with the smallest cross section area of sheath or the least conductive material (such as all lead rather than composite, aluminium or stranded copper) and thicker insulation (older type cables which subsequently have a slightly weaker mutual coupling between the core and sheath). If further refinement or confidence is required, the circuits should be modelled with the appropriate level of detail and the work

would normally show that a lower ground return current is applicable (i.e. more current returning via the cable screens or metallic routes.)

The formulae and calculations cater for simple overhead line circuits where there is no associated earthwire. For steel tower supported circuits that have an over-running earthwire, account is made of the induced current return by using the table in Appendix E. Circuits that contain both underground cable and earthed overhead tower line construction are not presently addressed and need to be analysed on a site specific basis.

4.3.3 Amending calculations to account for increased ground return current in single core circuits that are not in flat or trefoil touching arrangement

The fault current calculations described in this document for single core cable have assumed that the cables are earthed at each end and in touching trefoil formation.

In many practical situations, the cables are separated by a nominal distance, either deliberately (to reduce heating effects) or inadvertently (for example when installed in separate ducts.)

When the distance between the individual cables is increased, the coupling between the faulted and other two cables is reduced. This in turn results in more current flowing through the local electrodes (R_B and R_A) and an increase in the EPR at each point.

Some fault current studies for 11kV and 132kV cables where the cables are in touching trefoil, touching flat or the spacing is 3 x D (i.e. 3 x the cable diameter) are included in Appendix H.

These show that, compared to touching trefoil, the ground return current component increases for the other arrangements as:

- The cable length increases
- The cable screen cross sectional area (or conductivity) increases

For a flat arrangement of 3 x D spacing, the ground return current is seen to increase by up to about 6% to 7%. Accordingly, if the cables are not touching, the ground return current and EPR may be adjusted by this amount or a more accurate amount deduced from the information in Appendix H or more detailed site specific analysis. If this effect is not accounted for, the results will be optimistic.

5. Calculations associated with external and internal impact of the EPR

5.1 Calculation of touch potentials

When developing formulae for calculating the value of 'touch' potentials, it is normal practice to refer these calculations to the potential of the natural ground surface of the site. From the safety aspect these calculated values are then compared with the appropriate safe value given in TS 41-24 which takes account of any footwear or ground covering resistance (e.g. chippings or concrete). It is important, therefore, to appreciate that the permissible safe value of 'touch' potential, as calculated in this section, will differ depending on the ground covering, fault clearance time and other factors prevailing at the site.

The developed formulae are not rigorous but are based on the recognised concept of integrating the voltage gradient, given by the product of soil resistivity and current density through the soil, over a distance of one metre. Experience has shown that the maximum values of 'touch' potential normally occur at the external edges of an earth electrode. For a grid electrode this potential is increased by the greater current density transferring from the electrode conductors to ground around the periphery of the grid as compared with that transferring in the more central parts. These aspects have been taken into account in the formulae firstly for 'touch' potential and secondly for the length of electrode conductor required to ensure a given 'touch' potential is not exceeded.

Formulae are provided in Appendix B to provide the following:

- External touch potential at the edge of the electrode (separately earthed fence) – Formula P1.
- External touch potential at the fence (separately earthed fence) – P2.
- External touch potential at fence where there is no external perimeter electrode (bonded fence arrangement) – P1.
- External touch potential at fence with external perimeter electrode 1m away (bonded fence arrangement) – P3.
- Touch voltage within substation earth grid – P4

5.2 Calculation of external impact zones

5.2.1 External step potential

The step potential is the potential difference between two points that are 1m apart. This can be derived as the difference in calculated surface potential between two points that are 1m apart (Appendix B Formula P5).

$$U_{vs} = \frac{\rho I_F}{2\pi r}\left(\arcsin\frac{r}{x} - \arcsin\frac{r+1}{x}\right) \quad \text{where} \quad r = \frac{\rho}{4R_E} \qquad \text{[P5]}$$

5.2.2 Potential contours

The EPR at the substation creates potentials in the soil external to the substation and equation P7 in Appendix B can be used to provide an estimate of the distance to the contour of interest.

The formula is as below:

$$Z_x = \sqrt{\frac{A}{\pi}}\left[\left(sin\frac{V_x\,\pi}{2\,U_E}\right)^{-1} - 1\right] \qquad \text{[P7]}$$

Where Z_x is the distance to the point from the edge of the grid to where the voltage is V_x, and A is the area of the grid in square metres.

As emphasised elsewhere in this document, this and other formulae are restricted in accuracy by their assumptions of a symmetrical electrode grid and uniform soil resistivity. More accurate plotting of contours is possible using computer software or site measurements.

5.3 Transfer potential to LV systems where the HV and LV earthing are separate.

5.3.1 Background

This issue predominantly concerns distribution substations (typically 11kV:LV in the UK) where the HV and LV earthing systems are separate. Another application is where an LV earthing system is situated within the zone of influence of a Primary Substation with a high EPR. Previous guidance was based upon the presence of a minimum 'in ground' separation between the two electrode systems being maintained (distances of between 3m and 9m have historically been used in the UK). Operational experience suggested that there were fewer incidents than would be expected when the separation distance had been encroached on multiply earthed (i.e. TNC-S or PME arrangements). Theoretical and measurement studies (reference xx – Davies/Baudin et al – see Bibliography) showed that the minimum separation distance is a secondary factor, the main ones being the size and separation distance to the dominant or average LV electrode (where there are many small electrodes rather than one or a few large ones). We refer to this as the 'centre of gravity' of the LV electrode system.

Further information, together with worked examples is given in Appendix I.

5.3.2 Basic theory

Equations are available Appendix B (P6) to calculate the surface potential a given distance away from an earth electrode. Three different electrode shapes are included as follows:

a) A hemispherical electrode at the soil surface
b) A vertical earth rod
c) An earth grid – approximated to a horizontal circular plate.

The surface potential calculated at a point using these formulae is equal to the transfer potential to a small electrode located at that point because an isolated electrode would simply rise to the same potential as the surrounding soil.

When two or more electrodes are connected together, previous investigations have shown that the transfer potential on the combined electrode is an 'average' of the potentials that would exist on the individual components. This 'average' was found to be 'skewed' towards the surface potentials on 'dominant' electrodes, i.e. those having a lower earth resistance due mainly to being larger.

A simple method is required to explain and then account for this ‘averaging’ effect. Figure 5.1 shows a simple arrangement of a HV earth electrode and two nearby LV earth rods (A and B) which are representative of typical PME electrodes.

The three electrodes are located along a straight line and the soil surface potential profile along this route is also approximated in the figure.

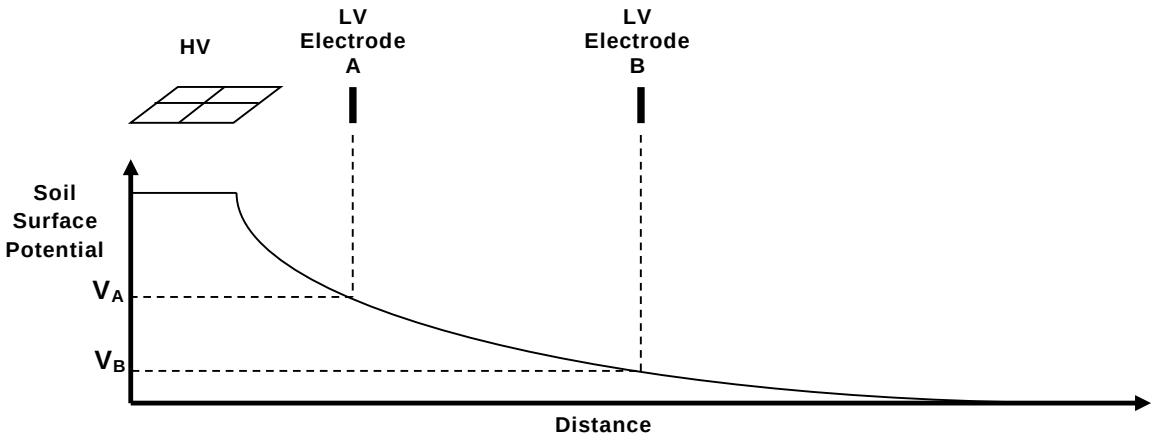

Figure 5.1 Surface potential near a simple HV and LV electrode arrangement

When there is an EPR (Earth Potential Rise) on the HV Electrode the LV Electrodes, A and B will rise to the potential of the local soil, i.e. the surface potential. In Figure 5.1, these are defined as V_A and V_B. The LV Electrodes are clearly at different potentials and this depends on the distance away from the HV electrode.

Once A and B are connected together (for example by the sheath / neutral of an LV service cable) the potential on them will change to an ‘average’ value, between VA and VB. In simple cases where A and B are of a similar size (with the same earth resistance in soils of similar resistivity), the average potential is accurate but where electrodes A and B are of significantly different sizes the ‘average’ is ‘skewed’ towards the dominant one (the larger one, i.e. that has the lowest earth resistance).

The ‘averaging’ effect can be explained by considering an equivalent circuit for the combined LV electrodes as shown in Figure 5.2. V_A and V_B are the local soil surface potentials and VT is the overall potential on the combined LV electrode. Electrodes A and B have earth resistances of R_A and R_B respectively.

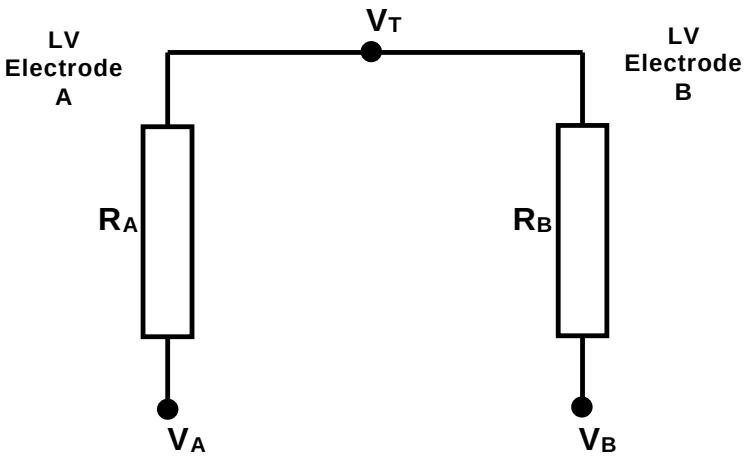

Figure 5.2 Equivalent Circuit for Combined LV Electrodes A & B

The circuit is a potential divider and the voltage on the combined LV electrode (V_T) can be expressed by:

$$V_T = \frac{V_A R_B + V_B R_A}{R_A + R_B}$$

If the LV electrode earth resistances are equal ($R_A = R_B$) then this equation reduces to $V_T = (V_A + V_B)/2$, i.e. the average of the two potentials.

Worked examples are given in Appendix I.

5.4 Risk assessment methodology

The risk assessment process is described in detail in TS 41-24.

For UK electricity industry applications, the risk of ventricular fibrillation (or electrocution) is a function of three probabilities, i.e.:

P (Probability of ventricular fibrillation) = P_F x P_E x P_{FB}

Where

P_F : Probability of fault occurrence

P_E : Probability distribution of EPR value/Probability of exposure

P_{FB}: Probability of body orientation to create fibrillation current

5.5 Methods of optimising the design (first draft)

Where the EPR is sufficient to create issues within or external to the substation, the following should be investigated and the most practicable considered for implementation.

5.5.1 More accurate evaluation of fault current

Does the value used, account for fault resistance and longitudinal circuit impedance? Have excessive factors for future fault current growth been used? For example, it may be more prudent to use the existing value and implement additional measures later, i.e. at the same time as the predicted increase in fault current.

5.5.2 Reducing the overall earth impedance

Can additional horizontal electrode be incorporated with new underground cable circuits?

Has the contribution of PILCSWA type cables in the vicinity been appropriately accounted for?

5.5.3 Reducing the touch potential within the installation

Can rebar or other non-bonded buried metalwork be connected to the electrode system?

Can other measures (such as physical barriers or isolation) be applied to certain areas?

Are the areas of high touch potential actually accessible?

6.0 Case study examples

The five case studies demonstrate the differences in complexity and design philosophies involved when moving from an unearthed overhead supplied installation with a single supply through to a distribution or transmission installation that has several sources of supply. All case studies demonstrate the new design facilities that are expected at a modern installation, together with use of the fault current analysis formulae available with this document.

6.1 Case Study 1: Overhead line fed 33kV substation (33kV fault at Substation B)

A new 33kV substation is to be built as Substation B. It is supplied from Substation A via an unearthed wood pole supported line that terminates just outside the operational boundary of each substation. The new substation is assumed to consist of just three items of plant, (incoming and outgoing switchgear and a power transformer), each on their own individual foundation slab. This is the most straightforward example to study and will be used to demonstrate both the modern design approach and methods of addressing touch potentials.

The approach used can be applied to similar arrangements at a range of voltage levels from 6.6kV to 66kV. At 6.6kV and 11kV, the substation would generally occupy a smaller area than in the examples shown.

This example considers a 33kV earth fault at Substation B on the incoming switchgear as shown in the diagram below.

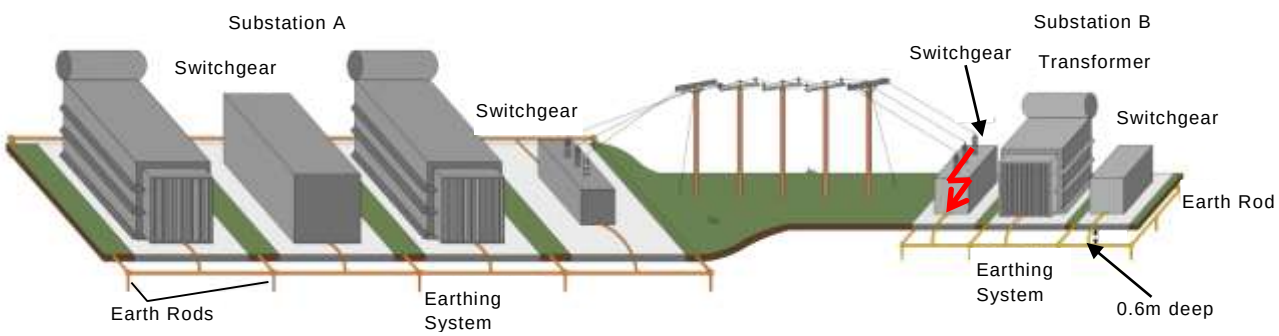

Figure 6.1 Supply arrangement for case study 1

(Overhead line fed substation)

For simplicity, all electrodes are assumed to be copper and have an equivalent circular diameter of 0.01m (the electrical properties of steel could be used for the reinforcing material). The soil resistivity is 75Ω·m and the 33kV fault current magnitude is limited to a maximum of 2kA by a neutral earth resistance connected to the 33kV winding neutral at Substation A.

Substation A is assumed to be an overhead fed 132/33kV substation with a measured earth resistance of 0.25Ω. The overhead line conductors between Substation A and B are assumed to be 185mm^2 ACSR.

Table 6.1 provides the fault clearance time and associated touch voltage limits for 33kV earth faults at Substation B when fed from Substation A.

33kV Fault Clearance Time (s)	Touch Voltage Limit (V) Inside Substation (75mm chippings)	Touch Voltage Limit (V) Outside Substation (on soil)
0.4	944	837

Table 6.1 Fault clearance time and touch voltage limits

6.1.1 Earth resistance calculations

For this case, the land area is assumed to be fixed. The first calculation assumes a minimum earthing system consisting of a perimeter electrode between 0.5m outside the foundation slabs and two cross members in-between the slabs (Fig.6.2). For the next iterations, ten vertical 3.6m rods are added (Fig.6.3) and then some horizontal rebar within each foundation slab (Fig.6.4).

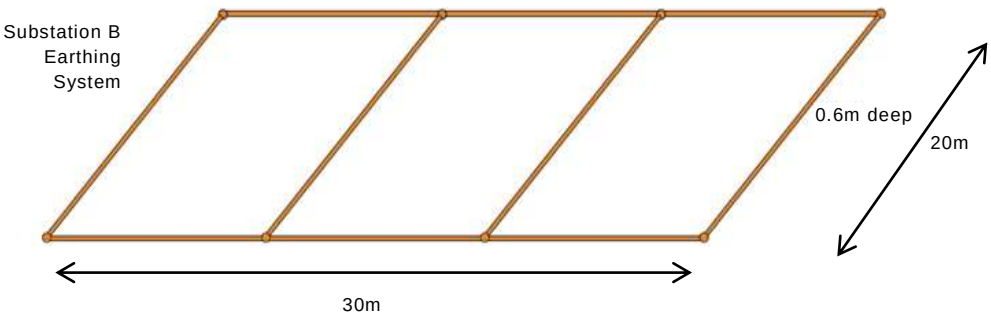

Figure 6.2 Substation B basic earth grid

Using Formula R4 from Appendix B, as below:

$$R_E = \frac{\rho}{4r} + \frac{\rho}{L_E}$$

Where $L_E =$ length of buried conductor (not including rods);

$$r = \sqrt{\frac{A}{\pi}}$$

$A =$ area of grid.

Substituting the values, as below:

$$R_E = \frac{75}{4r} + \frac{75}{140}$$

Where

$$r = \sqrt{\frac{A}{\pi}} = \sqrt{\frac{600}{\pi}} = 13.8$$

$$R_E = \frac{75}{55.3} + \frac{75}{140}$$

$$R_E = 1.89\Omega$$

Adding the ten rods as below, each of 3.6m length and 16mm diameter, requires the use of the more detailed formula.

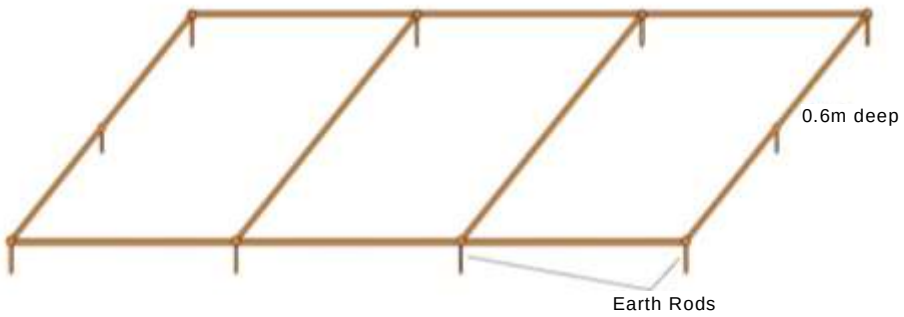

Figure 6.3 Substation B basic earth grid and rods

Using Formula R6 from Appendix B:

$$R_E = \frac{R_1 R_2 - {R_{12}}^2}{R_1 + R_2 - 2R_{12}}$$

Note: This formula may not be valid for unconventional geometries in which case computer modelling should be used.

Where:

$$R_1 = R_{ES} = \frac{\rho}{4r} + \frac{\rho}{L_E}$$

$$R_R = \frac{\rho}{2\pi L_R}\left(log_e \frac{8L_R}{d} - 1\right)$$

$$R_2 = R_{ER} = R_R\left(\frac{1 + k\alpha}{N}\right)$$

$$\alpha = \frac{\rho}{2\pi R_R s}$$

$$R_{12} = R_1 - \frac{\rho}{\pi L_E}\left(log_e \frac{L_R}{b} - 1\right)$$

$$R_E = \frac{R_1 R_2 - {R_{12}}^2}{R_1 + R_2 - 2R_{12}}$$

L_E = Length of horizontal electrode

L_R = Rod length; *d*=diameter. Valid for *d*<<L_R

$$r = \sqrt{\frac{A}{\pi}}$$

A = area of grid (m^2)

N = total number of rods

k = 4.9 for 10 rods – see Appendix B, formula R5

s = separation distance between

Therefore:

$$R_1 = \frac{75}{4 \times 13.82} + \frac{75}{140} = 1.89\Omega$$

$$R_R = \frac{75}{2\pi \times 3.6}(\log_e (\frac{8 \times 3.6}{0.016}) - 1) = 21.6\Omega$$

$$\alpha = \frac{75}{2\pi \times 21.6 \times 10} = 0.055$$

$$R_2 = 21.6 \times \left(\frac{1 + 4.9 \times 0.055}{10}\right) = 2.74\Omega$$

$$R_{12} = 1.89 - \frac{75}{\pi \times 140}\left(log_e \frac{3.6}{0.01} - 1\right) = 1.06\Omega$$

$$R_E = \frac{1.89 \times 2.74 - 1.06^2}{1.89 + 2.74 - 2 \times 1.06} = 1.62\Omega$$

rods (m)

b = equivalent diameter of the circular earth electrode or the width of a tape electrode.

As can be seen, the rods have reduced the resistance to 1.62 Ω compared to 1.89 Ω without rods.

For the final calculation, the rebar within the horizontal foundations have been approximated by the symmetrical meshes shown in Figure 6.4. For simplicity it is assumed that they have the same equivalent circular diameter as the copper conductor and the same electrical properties (Note 1).

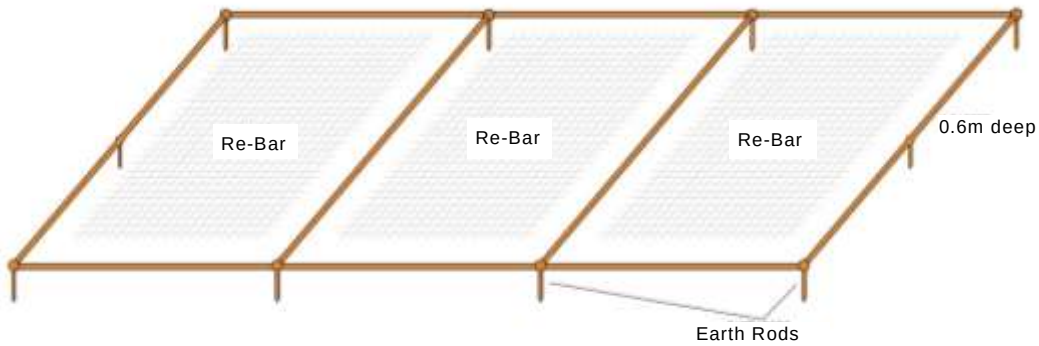

Figure 6.4 Substation B earth grid with rods and rebar

The same formula (R6) and approach would be used as previously, except that the length of conductor is increased to include the amount of rebar modelled (786m total of rebar added to that of copper).

Using Formula R6 from Appendix B:

$$R_E = \frac{R_1 R_2 - {R_{12}}^2}{R_1 + R_2 - 2R_{12}}$$

Where:

$$R_1 = R_{ES} = \frac{\rho}{4r} + \frac{\rho}{L_E}$$

$$R_R = \frac{\rho}{2\pi L_R}\left(log_e \frac{8L_R}{d} - 1\right)$$

$$R_2 = R_{ER} = R_R\left(\frac{1 + k\alpha}{N}\right)$$

$$\alpha = \frac{\rho}{2\pi R_R s}$$

$$R_{12} = R_1 - \frac{\rho}{\pi L_E}\left(log_e \frac{L_R}{b} - 1\right)$$

$$R_E = \frac{R_1 R_2 - {R_{12}}^2}{R_1 + R_2 - 2R_{12}}$$

L_E = Length of horizontal electrode

L_R = Rod length

d = diameter Valid for $d << L_R$

$$r = \sqrt{\frac{A}{\pi}}$$

A = area of grid (m^2)

N = total number of rods

k = 4.9 for 10 rods – see Appendix 2, formula R5

s = distance between rods (m)

b = equivalent diameter of the circular earth electrode or the width of a tape electrode.

Therefore:

$$R_1 = \frac{75}{4 \times 13.82} + \frac{75}{926} = 1.44\Omega$$

$$R_R = \frac{75}{2\pi \times 3.6}(\log_e (\frac{8 \times 3.6}{0.016}) - 1) = 21.6\Omega$$

$$\alpha = \frac{75}{2\pi \times 21.6 \times 10} = 0.055$$

$$R_2 = 21.6 \times \left(\frac{1 + 4.9 \times 0.055}{10}\right) = 2.74\Omega$$

$$R_{12} = 1.44 - \frac{75}{\pi \times 926}\left(log_e \frac{3.6}{0.01} - 1\right) = 1.31\Omega$$

$$R_E = \frac{1.44 \times 2.74 - 1.31^2}{1.44 + 2.74 - 2 \times 1.31} = 1.43\Omega$$

This provides a slightly lower resistance of 1.43Ω.

Note 1: For a more detailed analysis, the equivalent diameter of the different electrodes and their electrical properties and orientation would be included. In the majority of cases, this would require the use of a computer simulation package. In this case, computer modelling gives a resistance of 1.25Ω for the grid in Figure 6.4.

6.1.2 Calculation of Fault Current and Earth Potential Rise

The 33kV earth fault current is limited to a maximum of 2kA by a neutral earthing resistor. The fault current is further attenuated by the electrode resistance at Substation A and B together with the longitudinal impedance of the overhead line phase conductors. System X/R

ratios are neglected for simplicity. Table 6.2 provides the fault current and EPR corresponding to the earth resistances calculated in section 6.1.1.

Arrangement	Resistance (Ω)	Earth Fault Current at Substation B* (A)	EPR (V)
Basic grid	1.89	1447	2735
Grid & rods	1.62	1477	2393
Grid, rods & rebar (using formula)	1.43	1499	2144
Grid, rods & rebar (using computer software for comparison)	1.25	1521	1901

* For simplicity this has been calculated using an equivalent single phase circuit including the earth resistance at Substation A (0.25Ω), NER value (9.53Ω), circuit impedance (1.5Ω) and the earth resistance at Substation B from the table. These values would normally be available from power system short-circuit analysis software.

Note 1: Because there is an unearthed overhead line supply the calculated earth fault current is equal to the ground return current in this example.

Table 6.2 EPR for different grid arrangements

The addition of the rods and rebar have each reduced the resistance and EPR, but not dramatically. The site has an EPR that exceeds twice the acceptable touch voltage limit. It is therefore necessary to calculate the safety voltages and compare to touch voltage limits. The EPR also exceeds the 430V limit in relation to transfer potential onto telecommunication equipment (Hot Site) and the extent of the external 430V contour must be calculated.

For all subsequent calculations, the ‘Grid & Rods’ arrangement will be used, i.e. an earth resistance of 1.62Ω and 1477A fault current.

6.1.3 Calculation of touch potentials

Formula P1 estimates the touch potential one metre beyond the perimeter electrode. It is usually the case that provided the internal electrode has been correctly designed (with sufficient meshes), the touch potential here will exceed that anywhere within the grid area. For unusually shaped or non-symmetrical grids, computer software tools are needed for an accurate calculation.

The calculation procedure is as below:

For simplicity, the grid without foundation rebar is used, as in Figure 6.3. A single cross member is added later to give an initial estimate of the effect of the rebar.

6.1.3.1 External touch potential at the edge of the electrode

Using formula P1:

$$U_T = \frac{k_e \cdot k_d \cdot \rho \cdot I}{L_T}$$

$$k_e = \frac{1}{\pi}\left(\frac{1}{2} log_e \frac{h}{d} + \frac{1}{2h} + \frac{1}{(0.5 + D)} + \frac{1}{D}(1 - 0.5^{n-2})\right)$$

h = 0.6m, d = 0.01m

D = average spacing between parallel grid conductors = (20m + 10m)/2 = 15m

$$n = (n_A \times n_B)^{1/2}$$

Where n_A = 2, n_B = 4 (number of conductors – add definition if not in appendix)

k_d is a factor which modifies k_e to allow for non-uniform distribution of electrode current and is given by:

$$k_d = \left(0.7 + 0.3\frac{L_T}{L_p}\right)$$

Where L_T = total length of buried electrode conductor **including rods** if connected (176 m)

L_p = length of perimeter conductor **including rods** if connected (136 m)

ρ = 75 Ω·m

I = total current passing to ground through electrode (1477A)

$\mathrm{U_{T(grid)}} = 648\mathrm{V}$

This reduces to 602V when the additional central cross member along the x axis is added (this adds 30m of electrode and provides a uniform separation between mesh conductors in each direction of 10m).

Where there are more cross members or to account for the rebar, the additional conductors are accounted for in the formula in a similar process to that above and will provide a lower touch potential.

For comparison purposes, when the grids are modelled using computer software, the touch potentials are:

- Basic grid (plus rods), touch voltage maximum is 21% at the edge of the grid (center of one of the sides) and 34% at the center of the mesh (503V and 814V for an EPR of 2393V).
- With rebar included, touch voltage maximum is 19% on the edge of the grid (center of one of the sides) and only 5% at the center of the mesh (455V and 120V for an EPR of 2393V).

These are all significantly lower than the touch voltage limit of 944V (Table 6.1.) Since the EPR exceeds the TS 41-24 “high EPR” threshold, any LV supplies taken from site (or brought in) would need to be separately earthed. (See TS 41-24 section 9).

6.1.3.2 Touch potential on fence

If a metal fence is present about 2m outside the electrode system, independently earthed in accordance with TS 41-24, then by substituting the variables into Appendix B Formula P2, the touch voltage 1m external to the fence can be calculated and is 169V.

6.1.4 Calculation of external voltage impact contours

This requires use of Formula P6.3 from Appendix B (Note that calculations are in radians). Formula P6.3 can be more usefully rearranged to provide the distance from the outer edge of the earth grid to a set potential point in relation to the EPR that has already been calculated.

The procedure to determine the distance to the 430V contour is as below:

$$Z_{430} = \sqrt{\frac{A}{\pi}}\left[\left(sin\frac{430 \times \pi}{2 \times \mathrm{EPR}}\right)^{-1} - 1\right]$$

Substituting the values for A (600m^2) and the EPR (2393V),

$$Z_{430} = \sqrt{\frac{600}{\pi}}\left[\left(sin\frac{430 \times \pi}{2 \times 2393}\right)^{-1} - 1\right] = 36m$$

Similar calculations would be carried out for other contours of interest. It is important to note that these calculations only apply with a reasonable degree of accuracy to a grid that is close to a square shape and in uniform soil. For irregular shaped grids, such as one with radial spurs, a computer simulation or actual site measurement is necessary for sufficient accuracy.

6.2 Case study 2 (33kV fault at substation B)

In this example, the situation is identical to that of Case Study 1, except that the circuit between the substations is 3km of underground cable.

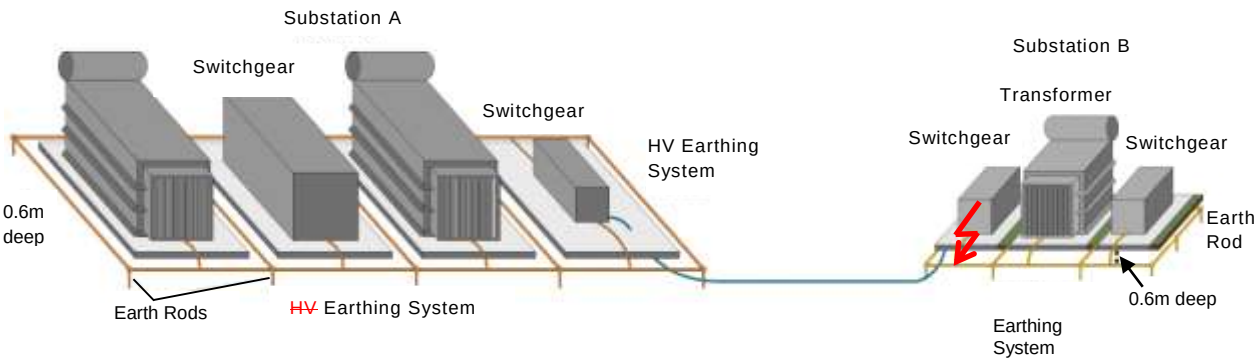

Figure 6.5 Supply arrangement for case study 2

For simplicity, all electrodes are assumed to be copper and have an equivalent circular diameter of 0.01m (the electrical properties of steel could be used for the reinforcing material). The soil resistivity is 75 Ω·m and the 33kV fault current magnitude is limited to a maximum of 2kA by a neutral earth resistance connected to the 33kV winding neutral at Substation A.

Substation A is assumed to be an overhead fed 132/33kV substation with a measured earth resistance of 0.25Ω. The underground cable between Substation A and B are assumed to be 185mm^2 Aluminium conductor Triplex cables. Self and mutual impedances for this cable type are provided in Table D.1 of Appendix D.

Table 6.3 provides the fault clearance time and associated touch voltage limits for 33kV earth faults at Substation B when fed from Substation A.

33kV Fault Clearance Time (s)	Touch Voltage Limit (V) Inside Substation (75mm chippings)	Touch Voltage Limit (V) Outside Substation (on soil)
0.4	944	837

Table 6.3 Fault clearance time and touch voltage limits

6.2.1 Resistance calculations

The resistance calculations are identical to those completed for case study 1 and the initial analysis will focus on the values that include the rebar and vertical earth rods (1.43Ω calculated in 6.1.2 – table 6.2).

6.2.2 Calculation of Fault Current and Earth Potential Rise

The 33kV earth fault current is limited to a maximum of 2kA by a neutral earthing resistor. The fault current is further attenuated by the underground cable impedance. The

underground cable circuit has a lower longitudinal phase impedance compared to an overhead line arrangement of the same dimension and type, hence the earth fault current of 1896A calculated at Substation B is higher than seen previously in case study 6.1.

To calculate the ground return current the formula below (from Appendix D, Table D.1) has been used together with the data summarised in Table 6.4.

$$\mathbf{I_{ES}} = -\mathbf{I_F}\left[\frac{\boldsymbol{l}(\mathbf{z_c} - \mathbf{z_{mp,c}})}{\boldsymbol{l}\mathbf{z_c} + \mathbf{R_A} + \mathbf{R_B}}\right] = -\mathbf{1896}\left[\frac{\mathbf{3}(\mathbf{0.87} - \mathbf{0.683})}{\mathbf{3}(\mathbf{0.87}) + \mathbf{0.25} + \mathbf{1.43}}\right] = -248\text{A}$$

Component	Value
R_A	0.25Ω
R_B	1.43Ω
l	3km
I_F	1896A
$\%I_{ES}$	13.1%
I_{ES}	248A
EPR_B	355V

Table 6.4 Data for fault current distribution and EPR Calculations

A large proportion of the earth fault current returns via the cable sheaths. The current flowing through the 1.43Ω substation earth resistance creates an EPR of only 355V (compared to 2144V in case study 1), despite the higher overall fault current. The EPR is considerably lower than the touch voltage limit, so no further calculations are necessary.

The worst conceivable situation would involve the loss of the sheath connections co-incident with the earth fault. This is considered an unlikely event especially for the triplex (three cable) type circuit. The EPR would increase to a theoretical maximum of around 2711V (1.43Ω x 1896A) [in practice the situation would be closer to 2144V as calculated for Case Study 1 because the fault current would reduce]. However the foundation rebar and perimeter electrode would restrict the touch voltage to just 29%, i.e. 621V, which is much lower than the limit threshold of 944V on chippings. The site would still be compliant in terms of safety voltages, although there would now be a larger external zone with high surface potential.

(NOTE: It is considered improbable that all the current could return via the electrode system only, as this would require all three individual cable screens to be open circuit co-incident with the fault.)

6.3 Case study 3 (33kV fault at Substation B, fed from a mixed cable and OHL circuit)

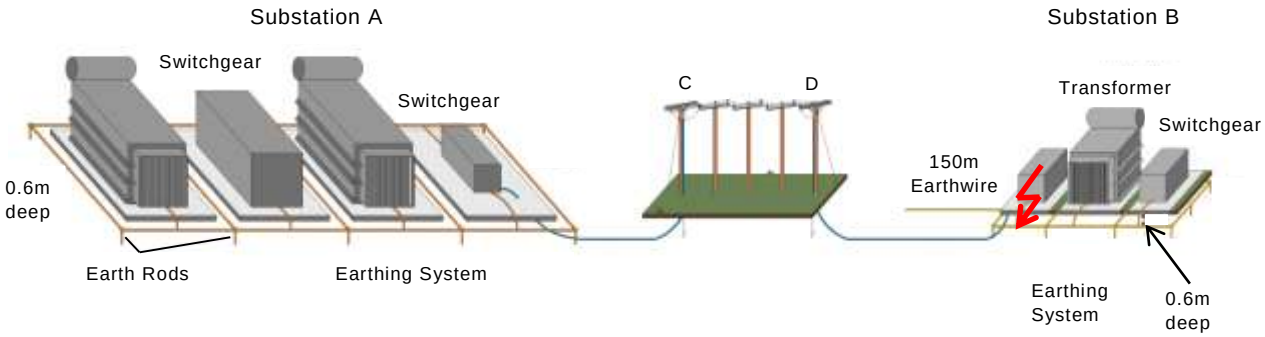

Figure 6.6 Supply arrangement for case study 3

This is a more complex example to demonstrate the issues involved in an area where there are towns or villages supplied from an overhead line network. This example shows a 33 kV supply but the arrangement is also very common at 11 kV; in either case an identical approach is used for analysis using appropriate cable data.

The circuit length remains at 3 km, with 500 m of cable at each end and 2 km of overhead line in the centre. The terminal poles at points C and D will have their own independent electrodes (rods and/or buried earth wire) and are assumed to each have an earth resistance of 10Ω for insulation co-ordination purposes.

6.3.1 Resistance calculations

The resistance of Substation B is the same as calculated previously for a soil resistivity of 75 Ω·m. However, as is common practice, the opportunity has been taken to install a buried earth wire with the incoming cable as shown. A length of 150m is assumed and this will have a resistance that will act in parallel with that of the grid.

Resistance of radial earth wire:

Using formula R7 from Appendix B, as below (noting that the conductor length is smaller than effective length given in Table A2.1:

$$R_H = \frac{\rho}{2\pi L_H}\left[log_e\left(\frac{{L_H}^2}{\kappa h d}\right)\right]$$

where κ=1.83 for round conductor, h=0.6, d=0.00944m (approx. diameter of 70mm^2)

The resistance of the earth wire is 1.16 Ω. The resistance of the earth grid is 1.43 Ω. In parallel, the combined resistance (ignoring proximity effects) is:

1.16Ω // 1.43Ω = 0.64 Ω

When proximity effects are included, by using a computer simulation software, the calculated resistance value increases only slightly to 0.675 Ω.

6.3.1 Calculation of Fault Current and Earth Potential Rise

The 33kV earth fault current is limited to a maximum of 2kA by a neutral earthing resistor. The impedance of the overhead line and cable arrangement further attenuates the fault

current at Substation B. The corresponding maximum earth fault current has been calculated to be 1594A.

As this supply arrangement does not have a continuous metallic sheath back to the source, the ground return current is calculated for the two 500m sections of cable either side of the overhead lines. The formulae from Appendix D and cable data in Table D.1 are used to calculate the fault current distribution.

$$\mathbf{I_{ES}} = -\mathbf{I_F}\left[\frac{\boldsymbol{l}(\mathbf{z_c} - \mathbf{z_{mp,c}}) + \mathbf{R_A}}{\boldsymbol{l}\mathbf{z_c} + \mathbf{R_A} + \mathbf{R_B}}\right] = -\mathbf{1594}\left[\frac{\mathbf{0.5(0.87 - 0.683) + 10}}{\mathbf{0.5(0.87) + 10 + 0.675}}\right] = -1448\text{A}$$

Component	Value
R_A (Point D)	10Ω
R_B (Substation B)	0.675Ω
l	0.5km
I_F	1594A
$\%I_{ES}$	90.8%
I_{ES}	1448A
EPR_B	977V

Table 6.5 Data for fault current distribution and EPR calculation

As shown in Table 6.5, 90.8% of the available fault current flows through R_B and creates an EPR of 977V. The remainder of the current returns via the cable sheaths and through the earth resistance at point D, creating an EPR of approximately 1470V at D.

The same equation can be used to calculate the EPR at the source substation (substation A) and the first pole/cable interface at C for the same fault at Substation B:

$$\mathbf{I_{ES}} = -\mathbf{I_F}\left[\frac{\boldsymbol{l}(\mathbf{z_c} - \mathbf{z_{mp,c}}) + \mathbf{R_A}}{\boldsymbol{l}\mathbf{z_c} + \mathbf{R_A} + \mathbf{R_B}}\right] = -\mathbf{1594}\left[\frac{\mathbf{0.5(0.87 - 0.683) + 10}}{\mathbf{0.5(0.87) + 10 + 0.25}}\right] = -1506\text{A}$$

Component	Value
R_A (Point C)	10Ω
R_B (Substation A)	0.25Ω
l	0.5km
I_F	1594A
$\%I_{ES}$	94.5%
I_{ES}	1506A
EPR_A	377V

Table 6.6 Case study 3, input data and results for initial part of circuit

As shown Table 6.6, the EPR at the source substation A is only 377V. The EPR is sufficiently low that the calculation of touch, step and external impact contours is not required. From Table 6.5, the EPR at Substation B, exceeds the limits for soil and chipping surfaces, hence the calculation of touch, step and external impact contours is required.

Although the EPR at terminal poles C and D is relatively high (880V and 1470V respectively) this may not pose a touch voltage hazard as the earth conductors on the pole are normally insulated.

6.4 Case study 4 (Multiple neutrals)

6.4.1 Introduction

In UK transmission networks (generally operating at voltages of 132kV and above) the System Neutral is solidly and multiply earthed. This is achieved by providing a low impedance connection between the star point of each EHV transformer (primary) winding and each substation earth electrode. The low impedance neutral connection often provides a parallel path for earth fault current to flow and this reduces the amount of current flowing into the substation earth electrode. For EPR calculations in such systems, the neutral returning component of earth fault current must be considered. The current “split” between the different return paths in this study is shown by red arrows in Figure 6.7 below.

Circuits entering a substation are often via a mixture of overhead and underground cables. As explained in Section 4, a high percentage of the earth fault current flowing in an underground cable circuit will return to source via the cable sheath if bonded at both ends (typically 70% to 95%), whereas in an earthed overhead line circuit the current flowing back via the aerial earthwire is a lower percentage (typically 30% - 40%). It is therefore necessary to apply different reduction factors to the individual currents flowing in each circuit. The individual phase currents on each circuit are required for these calculations.

The detailed fault current data required is normally available at transmission level from most network modelling software packages. Any additional calculation effort at an early stage is usually justified by subsequent savings in design and installation costs that result from a lower calculated EPR.

This case study has been selected to illustrate:

a) Calculations to subtract the local neutral current in multiply earthed systems;

b) The application of different reduction factors for overhead line and underground cable circuits;

c) A situation where there are fault infeeds from two different sources

6.4.2 Case Study Arrangement

Figure 6.7 shows a simplified line-diagram of an arrangement where a 132kV single phase to earth fault is assumed at 132/33kV Substation X. Two 132kV circuits are connected to Substation X, the first is via an overhead line from a 400/132kV Substation Y and the second is via an underground cable from a further 132/33kV Substation Z which is a wind farm connection. There is a single transformer at Substation X and its primary winding is shown together with the star point connection to earth.

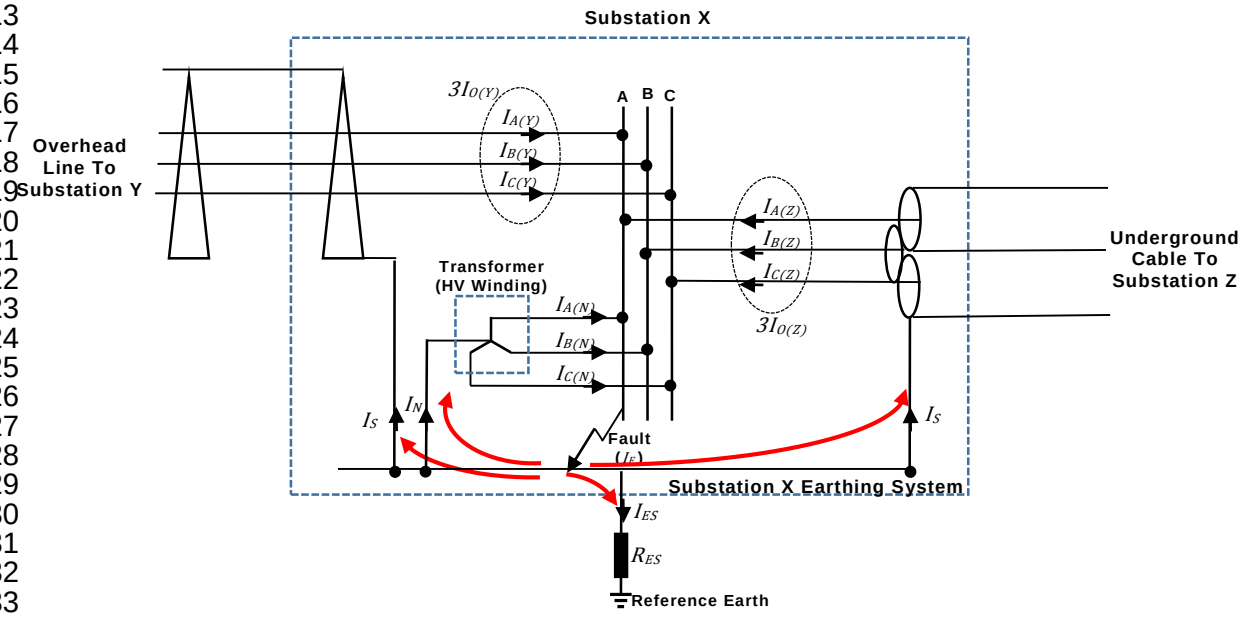

Figure 6.7 Case study arrangement
(Red arrows show current "split" from the fault point)

6.4.3 Case study data

For the single phase to earth fault on Phase A illustrated in Figure 6.7, the individual currents flowing on each phase of each circuit and in the transformer HV winding are shown in Table 6.7. This data is typical of that from short-circuit software package used for transmission studies.

Single-phase to ground fault at Substation X							
From	**Ik"A [kA]**	**Ik"A, Angle [deg]**	**Ik"B [kA]**	**Ik"B, Angle [deg]**	**Ik"C [kA]**	**Ik"C, Angle [deg]**	**$3I_0$ [kA]**
Transformer (HV Side)	0.840	62.386	0.291	76.190	0.495	63.802	1.620
Substation Y	4.163	72.533	0.766	-135.761	0.598	-93.980	2.916
Substation Z	8.093	76.072	0.541	27.674	0.233	139.316	8.559
Sum of contributions into	**Ik"A [kA]**	**Ik"A, Angle [deg]**	**Ik"B [kA]**	**Ik"B, Angle [deg]**	**Ik"C [kA]**	**Ik"C, Angle [deg]**	
Substation X	13.071	74.074	0.000	0.000	0.000	0.000	
	UA, [kV]	**UA, [deg]**	**UB, [kV]**	**UB, [deg]**	**UC, [kV]**	**UC, [deg]**	
	0.000	0.000	86.916	-146.069	84.262	91.344	

Table 6.7 Case study short-circuit data

6.4.4 Treatment of neutral current

In Table 6.7 the 'Sum of contributions into Substation X' is the vector sum of the faulted 'A' Phase contributions from the two lines and the transformer and is defined as the Total Earth Fault Current (I_F). The contribution shown as 'Transformer (HV Side)' represents the transformer star-point or 'neutral' current (I_N).

The current that returns to Substations Y and Z via Substation X Earth Electrode (I_{ES}) is separate from that flowing back via the transformer neutral (I_N) and metallic paths (neutral and healthy phases). It can be shown that $I_F - I_N = 3I_0$ where $3I_0$ is the three times the sum of zero-sequence current on all lines connected to the substation. For each line, $3I_0$ is equal to the vector sum of the individual line phase currents, i.e. $3I_0 = I_A + I_B + I_C$.

Table 6.8 provides the calculated $3I_0$ values for each of the two lines and their sum.

Contribution from:	$3I_0$ Magnitude (kA)	$3I_0$ Angle (Deg)
Substation Y	2.916	76.9
Substation Z	8.559	74.8
Sum of Contributions from Y+Z	11.470	75.3

Table 6.8 Sum of contributions to earth fault current

From Tables 6.7 and 6.8 it can be seen that earth fault current magnitude of 13.07kA (as indicated by the short-circuit package) reduces to 11.47kA once the local neutral current is subtracted.

As a further check of this value the sum of the currents flowing on the Transformer (HV Side) can be subtracted from the total earth fault current from the short-circuit package to arrive at the same result, i.e. 13.07∠74° - 1.62∠65.3° = 11.47∠75.3° (kA)

6.4.5 Fault current distribution

The circuit from Substation Y is via an overhead line whereas that from Substation Z is via an underground cable. Further calculations are required to calculate the fault current distribution between the substation electrode, tower line earthwire and the underground cable sheaths.

Table 6.9 lists the additional information assumed for this case study.

Line construction between Substations X and Y	132kV double circuit tower line – L4 construction. 20 spans long.
Reduction factor for line between Substations X and Y	0.708∠-9° (as per EREC S.34, Appendix E)
Line construction between Substations X and Z	132kV, 3 x 1c, 300mm^2 aluminium conductor, 135mm^2 copper-wire screen, XLPE insulated. 5km circuit length.
Substation Y Earth Resistance	0.1Ω
Substation X Earth Resistance	0.5Ω
Reduction factor for line between Substations X and Z	0.067∠178°

Table 6.9 Case study information for fault current distribution calculations

The calculated reduction factors (r_E) for each circuit type from Table 6.9 are applied to the three-times zero-sequence currents ($3I_0$) on each circuit and the total ground return current (I_E) calculated as shown in Table 6.10.

Contribution From:	$3I_0$ Magnitude (kA)	$3I_0$ Angle (Deg)	r Magnitude	r Angle (Deg)	I_E Magnitude (kA)	I_E Angle (Deg)
Substation Y	2.916	76.9	0.708	-9	2.06	67.9
Substation Z	8.559	74.8	0.067	178	0.565	252.8
Sum of Contributions from Y+Z	11.470	75.3			1.50	66.1

Table 6.10 Calculated ground return current

The total Ground Return Current magnitude (I_E) is shown to be only 1.5kA which is significantly lower than the short-circuit current at the fault point (I_F) of 13.07kA.

6.4.6 Earth potential rise

The Earth Potential Rise (EPR) can be calculated simply as the product of the Ground Return Current I_E and the overall Earth Resistance R_E at Substation X, i.e. 1.5kA x 0.5Ω = 750V

6.5 Case study 5 (11kV Substation and LV earthing interface)

A 500kVA 11kV unit substation is looped into two 11kV, 185mm^2 aluminium triplex cables with 35mm^2 copper screens, each 1km long. Cable self and mutual impedances are taken from Table D.1, Appendix D. One cable is connected to the 11kV source and the other is feeding an open 11kV ring. A cladding enclosure surrounds the substation and a concrete raft covers the internal area of approximately 3x3m. The soil resistivity is 50 Ω·m and the maximum fault current for a single phase to earth fault is 2900A. A 3s fault clearance time is assumed and the corresponding touch voltage limit (on soil) is 233V. In this example, polymeric LV cables are assumed to be employed which offer no effective contribution to earthing.

6.5.1.1 Design Option 1

The first preliminary design assumes an earth electrode comprising of a perimeter horizontal bare copper electrode (size 25mm x 4mm) around the plinth buried at a depth of 0.6m with four vertical rod electrodes connected at each corner. The rods are assumed to be 2.4m long and 16mm diameter.

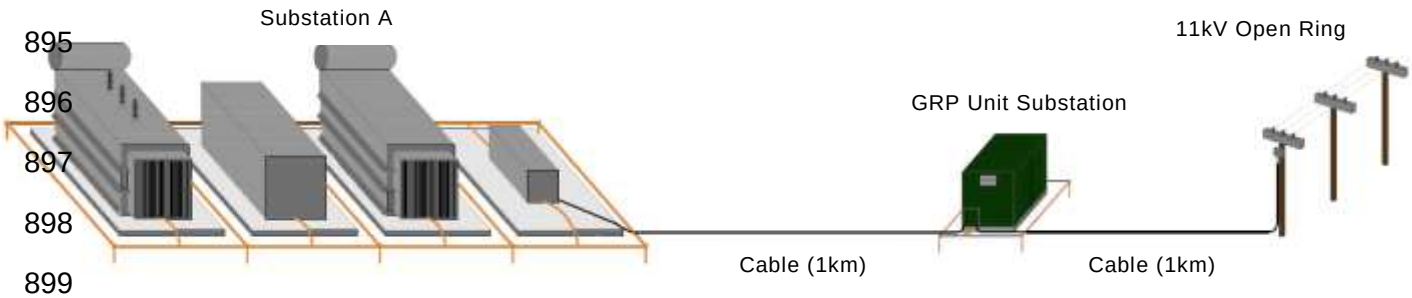

The resistance of the earth electrode is calculated using formula R4 to R7 from Appendix B:

$$R_1 = R_{ES} = \frac{\rho}{4r} + \frac{\rho}{L_E}$$

$$R_R = \frac{\rho}{2\pi L_R}\left(log_e \frac{8L_R}{d} - 1\right)$$

$$R_2 = R_{ER} = R_R\left(\frac{1 + k\alpha}{N}\right)$$

$$\alpha = \frac{\rho}{2\pi R_R s}$$

$$R_{12} = R_1 - \frac{\rho}{\pi L_E}\left(log_e \frac{L_R}{b} - 1\right)$$

$$R_E = \frac{R_1 R_2 - {R_{12}}^2}{R_1 + R_2 - 2R_{12}}$$

Therefore:

$$R_1 = \frac{50}{4 \times 1.69} + \frac{50}{12} = 11.56\Omega$$

L_E = Length of horizontal electrode

L_R =Rod length; *d*=diameter. Valid for *d*<<L_R

$$r = \sqrt{\frac{A}{\pi}}$$

N = total number of rods = 4; k and α defined below.

A = area of grid (m^2)

s is the distance between rods (m)

2.4m rod length, 16mm diameter.

$$R_R = \frac{50}{2\pi \times 2.4}(\log_e (\frac{8 \times 2.4}{0.016}) - 1) = 20.19\Omega$$

$$\alpha = \frac{50}{2\pi \times 20.19 \times 3} = 0.13$$

$$R_2 = 20.19 \times \left(\frac{1 + 2.6 \times 0.13}{4}\right) = 6.75\Omega$$

$$R_{12} = 11.56 - \frac{50}{\pi \times 12}\left(log_e \frac{2.4}{0.01} - 1\right) = 5.62\Omega$$

$$R_E = \frac{11.56 \times 6.75 - 5.62^2}{11.56 + 6.75 - 2 \times 5.62} = 6.57\Omega$$

k = 2.6 for 4 rods – see Appendix 2, formula R5

As this is a preliminary design, several conservative assumptions must be made. The source resistance is assumed to be 0.1Ω and the attenuation of fault current by the earth resistance and circuit impedance is neglected at this stage. The fault current distribution and calculated EPR associated with the source 11kV cable, calculated using the formulae provided in Appendix D is provided in Table 6.11.

$$\mathbf{I_{ES}} = -\mathbf{I_F}\left[\frac{\boldsymbol{l}(\mathbf{z_c} - \mathbf{z_{mp,c}})}{\boldsymbol{l}\mathbf{z_c} + \mathbf{R_A} + \mathbf{R_B}}\right] = -\mathbf{2900}\left[\frac{\mathbf{1(0.87 - 0.683)}}{\mathbf{1(0.87) + 0.1 + 6.57}}\right] = -71.9\text{A}$$

Component	Value
R_A	0.1 Ω
R_B	6.57 Ω
l	1km
I_F	2900A
$\%I_{ES}$	2.48%
I_{ES}	71.9A
EPR_B	472V

Table 6.11 Design Option 1, Input Data and Results

The EPR exceeds 2 x U_{TP} (2 x 233V = 466V) and segregation of HV/LV earthing systems is required.

6.5.1.2 Surface Current Density

The surface current density of the earth electrode for the fault conditions listed in table 6.11 is to be evaluated and compared with the limit of surface current density, provided by formula C2 in Appendix B, as shown below:

$$J_{Limit} = 10^{-3}\left(\frac{57.7}{\rho t}\right)^{1/2}$$

$$J_{Limit} = 10^{-3}\left(\frac{57.7}{50 \times 3}\right)^{1/2} = 0.62\ x\ 10^{-3}\ A/mm^2$$

The total electrode surface area is:

$$Horizontal\ Electrode\ Surface\ Area = 696 \times 10^3\ mm^2$$

$$Vertical\ Rod\ Surface\ Area = 483 \times 10^3\ mm^2$$

$$Total\ Electrode\ Surface\ Area = 1180 \times 10^3\ mm^2$$

Assuming a uniform current distribution throughout the earthing system, the actual current density is:

$$J = \left(\frac{71.9}{1180 \times 10^3}\right) = 60.9 \times 10^{-6}\ A/mm^2$$

Based on the above, the actual current density is below the limit of surface current density, hence the amount of electrode installed is adequate. The electrode will remain within limits for a total ground return current up to 731A. The impact of this limit should be considered for future planning i.e. increased fault levels or loss of sheath connection.

6.5.2 Design Option 2

A second design is considered and comprises the arrangement described in option 1 together with a bare stranded electrode buried with each 11kV cable for a distance of 20m and connected to the substation earthing system.

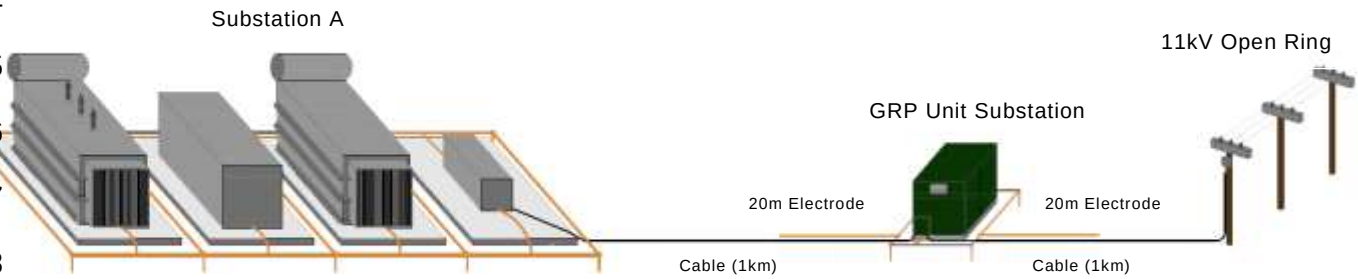

The resistance of each horizontal electrode can be calculated using Formula R7 from Appendix B:

$$R_H = \frac{\rho}{2\pi L_H}\left[log_e\left(\frac{{L_H}^2}{khd}\right)\right]$$

$$R_H = \frac{50}{2\pi \times 20}\left[log_e\left(\frac{20^2}{1.83 \times 0.6 \times 0.00944}\right)\right] = 4.2\Omega$$

Ignoring proximity effects, the combined parallel resistance for the substation and both horizontal electrodes is 1.59Ω. Utilising the same basic assumptions as section 6.5.1, the fault current distribution and EPR for the earthing arrangement, calculated using the formulae provided in Appendix D, is provided in Table 6.12.

$$\mathbf{I_{ES}} = -\mathbf{I_F}\left[\frac{\boldsymbol{l}(\mathbf{z_c} - \mathbf{z_{mp,c}})}{\boldsymbol{l}\mathbf{z_c} + \mathbf{R_A} + \mathbf{R_B}}\right] = -\mathbf{2900}\left[\frac{\mathbf{1}(\mathbf{0.87} - \mathbf{0.683})}{\mathbf{1}(\mathbf{0.87}) + \mathbf{0.1} + \mathbf{1.59}}\right] = -212\text{A}$$

Component	Value
R_A	0.1Ω
R_B	1.59Ω
l	1km
I_F	2900A
$\%I_{ES}$	7.31%
I_{ES}	212A
EPR_B	337V

Table 6.12 Design Option 2, Input Data and Results

Table 6.12 demonstrates that the EPR based on the second preliminary design is below the 466V limit and therefore a combined HV/LV earthing system can be installed.

APPENDICES

A. Symbols used within formulae

B. Formulae

C. Earthing Design Methodology (block diagram)

D. Formulae for determination of ground return current for earth faults on metal sheathed cables

E. Ground current for earth faults on steel tower supported circuits with aerial earthwire

F. Chart to calculate resistance of horizontal electrode

G. Chain impedance of standard 132kV earthed tower lines

H. Sample calculations showing the effect on the ground return current for change in the separation between three single core cables

I. Transfer potential from HV systems to LV systems with multiple earthed neutral

APPENDIX A – Symbols used within formulae

(Those shown in Old column were used in earlier versions of this document, but have been updated to align with BS EN 50522:2010

System components

New	*Old*	Symbol Description
CH	*CH*	chain (or ladder) network of an overhead line earthwire with its connections to earth via metal lattice towers along its route, or an insulated cable's sheath that has connections to earth via installations along its length
FT	*FT*	fault-throwing switch
EG	*G*	installation's grid electrode
h	*H*	external horizontal electrode (e.g. a copper tape, un-insulated stranded copper conductor or a power cable with no insulated serving – i.e. PILC or PILCSWA – that is laid direct in the soil)
E_P	*P*	plate electrode
E_R	*R*	rod electrode
s	*S*	line earthwire
E_T	*T*	line tower footing electrode

Electrical quantities and dimensions

I_F	I_F	total earth fault current – A
I_{ES}	I_E	component of I_F passing to ground through grid electrode – A
I_E	I_{gr}	component of I_F that flows through the electrode network and eventually all returning through the ground – A
r_E	r_E	reduction factor of the overhead line
I_N	I_l	current via local transformer neutral - A
I_r	I_r	component of I_F through remote transformer neutrals – A
I_h	I_h	component of I_E passing to ground through external horizontal electrode – A
I_S	I_{Sr}	component of I_F returning through earth wire or cable sheath – A
I_{ET}	I_t	component of I_E passing to ground through tower footing – A
k	k	screening factor of conductors carrying induced current – e.g. earth wires, cable sheaths
Z_x		distance to point where voltage on soil is xV – m
D	D	average spacing between parallel grid electrodes – m

New	*Old*	Symbol Description
b	b	equivalent diameter of circular electrode – m
d	d	diameter of circular electrode (or width of tape electrode) – m
L_C or l	l	cable length – km
L_R	l_R	length of earth rod - m
L_E	L or l_E	total length of electrode (e.g. in grid, not including rods) - m
L_H	l_H	horizontal electrode length - m
L_p	l_P	grid or loop electrode length (perimeter) - m
L_T		total electrode length, including horizontal electrode and summated rod lengths
ρ	ρ	earth resistivity – Ωm
r_a	r_a	cable armour resistance per unit length – Ω/km
r_c	r_c	cable sheath resistance per unit length – Ω/km
h	h	radius of equivalent hemisphere – m
R_R		resistance of single rod – Ω
R_{ER}	R_2	resistance of group of rods – Ω
R_A		earthing resistance at substation A - Ω
R_B		earthing resistance at substation B - Ω
R_E	R_e	total earthing resistance at substation – Ω
R_f	R_f	fault resistance – Ω
R_{ES}	R_l and R_g	grid electrode earthing resistance – Ω
R_{EH}	R_h	external horizontal electrode earthing resistance - Ω
R_{NE}	R_{ne}	neutral earthing resistance - Ω
R_{EP}	R_p	earth plate resistance – Ω
R_{ET}	R_t	tower footing resistance - Ω
s	S	line span length – km
U_E	V_e	rise of earth potential of substation – V

New	*Old*	Symbol Description
U_T		touch potential – V
U_S		step potential – V
U_{vT}		prospective touch potential – V
U_{vS}		prospective step potential – V
U_{SP}		permissible step voltage – V
U_{TP}		permissible touch voltage – V
φ		earth surface potential
V_S	V_S	voltage on the surface of the soil at point S, with respect to true earth potential – V
V_T		transfer potential
Z_Q		tower line earth wire impedance per unit length - Ω/km
Z_C	z_c	(cable sheath impedance) - the impedance of the overall sheath and armour of 3-core cables, or of all three sheaths of 3 × single-core cables, per unit length – Ω/km
Z_{CH}	Z_{ch}	chain (or ladder) network impedance – Ω (Referred to as Z_p in BS EN 60909-3:2010; referred to as Z_∞ in BS EN 50522:2010)
Z_E	Z_e	impedance to earth, substation earthing impedance – Ω
$z_{mp,1}$	$z_{mp,1}$	)
$z_{mp,2}$	$z_{mp,2}$	mutual impedance between cable conductor and sheaths 1, 2 and 3 respectively of three single core cables - Ω/km
$z_{mp,3}$	$z_{mp,3}$	)
$z_{ml,2}$	$z_{mp,2}$	)
$z_{ml,3}$	$z_{mp,3}$	mutual impedance between sheaths 1, 2 and 3 of three single core cables - Ω/km
$z_{m2,3}$	$z_{mp,3}$	)
$z_{mp,s}$	$z_{mp,s}$	mutual impedance between line conductor and earth wire - Ω/km
$z_{mp,c}$	$z_{mp,c}$	mutual impedance between cable conductor and sheath of three core cables - Ω/km
z_S		earthwire impedance per unit length - Ω/km
$\angle$	$\angle$	angle in degrees

970

APPENDIX B – Formulae

Earth resistance formulae. (Note that all formulae are those from EREC S34, 1986 version, except where noted otherwise).

Symbols are defined in Appendix A unless specifically defined in this Appendix.

Refer to (BS 7430) for additional formulae related to simple rod arrangements that would not generally be used at public electricity network operator installations.

The formulae have been grouped as follows:-

R = earth resistance of different arrangements

C = current rating

P = potentials (surface, touch and step)

Formula R1 Rod electrode

$$R_{\mathbf{R}} = \frac{\rho}{2\pi L_{\mathbf{R}}}\left[log_e\left(\frac{8L_{\mathbf{R}}}{d}\right) - 1\right]$$

Formula R2 Plate electrode (mainly used for sheet steel foundations)

$$R_{\mathbf{EP}} = \frac{\rho}{8r}\left(1 + \frac{r}{2.5h + r}\right)$$

where:

$$r = \sqrt{\frac{A}{\pi}}$$

$A =$ area of one face of the plate (m^2), $h =$ depth of burial (m)

Formula R3 Ring electrode

$$R_{\mathbf{E}} = \frac{\rho}{4\pi^2 r}\left(log_e \frac{64r^2}{dh}\right)$$

where:

h = depth (m)

r = ring radius (m) $= \sqrt{\frac{A}{\pi}}$

d = conductor diameter (m)

Formula R4 Grid/mesh resistance

$$R_{\mathbf{ES}} = \frac{\rho}{4r} + \frac{\rho}{L_{\mathbf{E}}}$$

$$r = \sqrt{\frac{A}{\pi}}$$

A = area of grid (m^2); L_E = total length of buried conductor excluding rods (m).

Formula R5 Group of rods around periphery of grid

$$R_{ER} = R_R\left(\frac{1 + k\alpha}{N}\right)$$

R_R = Resistance of one rod (Ω) (Formula R1)

$$\alpha = \frac{\rho}{2\pi R_R s}$$

s = spacing of rods (m)

N = total number of rods around periphery of grid

k = factor from Figure B.1 below

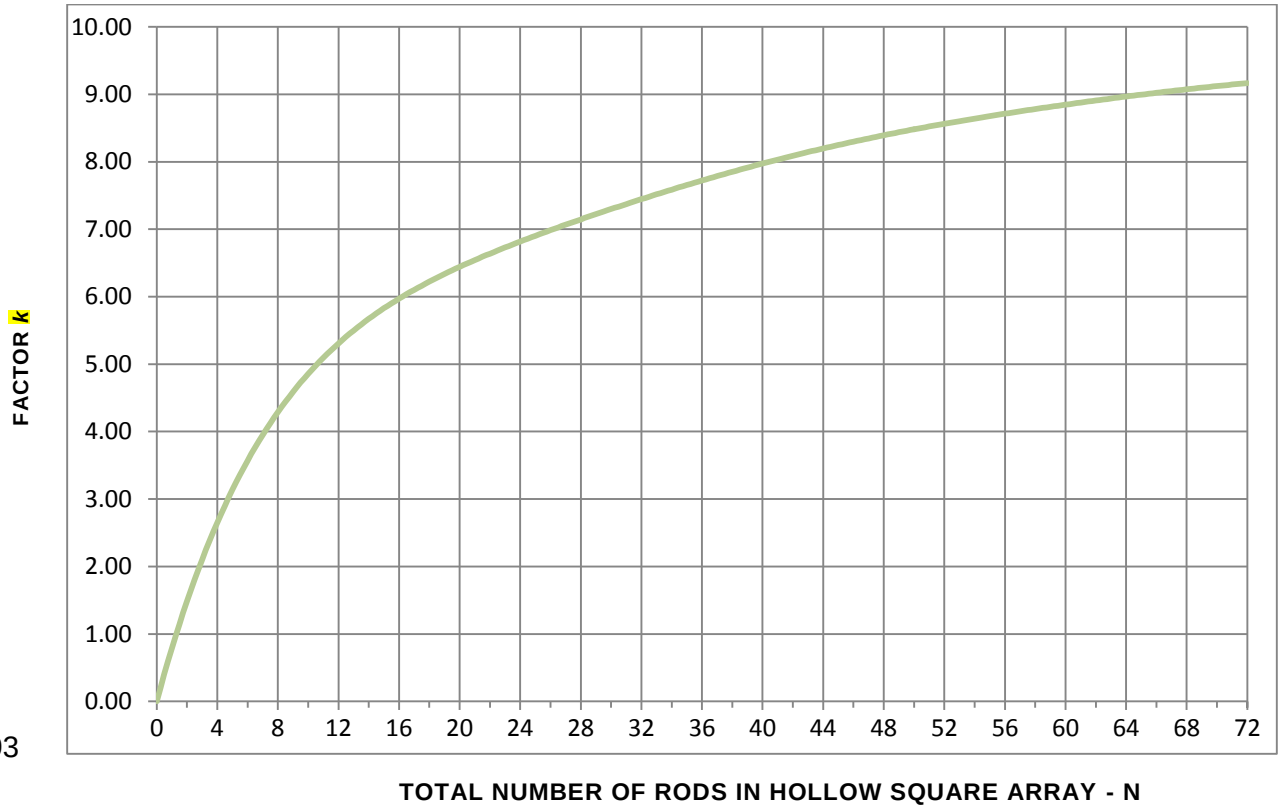

FIGURE B.1 - *k* factor for formula R5

Formula R6 Combined grid and rods (rods on outside only)

$$R_{\mathbf{E}} = \frac{R_1 R_2 - {R_{12}}^2}{R_1 + R_2 - 2R_{12}}$$

where:

$R_1 = R_{\mathbf{ES}}$ = resistance of grid (Formula R4)

$R_2 = R_{\mathrm{ER}}$= resistance of group of rods around periphery of grid (Formula R5)

$$R_{12} = R_1 - \frac{\rho}{\pi L_{\mathbf{E}}}\left(log_e \frac{L_{\mathbf{R}}}{b} - 1\right)$$

$b = w/\pi$

where w = width of tape electrode (m), $L_{\mathbf{E}}$ = length of buried conductor excluding rods (m), $L_{\mathbf{R}}$ = rod length (m)

Note : the formula provides sensible results only for generally used dimensions – in particular for normal rod widths/diameters and spacing.

Formula R7 Strip/tape electrode

See Appendix F or use the formula (from BS 7430):

$$R_{\mathbf{H}} = \frac{\rho}{2\pi L_{\mathrm{H}}}\left[log_e\left(\frac{{L_{\mathrm{H}}}^2}{\kappa h d}\right)\right]$$

h=depth of burial (m); *d*=diameter or width of conductor (m); κ=1.83 for round conductor, or 1.36 for strip.

The above formula is only valid up to certain lengths (the effective length), after which the effect of adding further length is significantly diminished due to the self impedance of the electrode that is not accounted for in Formula R7. The approximate effective lengths for a single earth wire, tape or PILCSWA cable are shown in Table B.1/Figure B.2 below. For larger cables – in particular where there are several in reasonably close proximity, computer software or a more detailed equation (such as Schwartz – IEEE80 section 14.3 [BIBLIOGRAPHY]) should be used. The advantage of using computer software is that the extended electrode cross sectional area and material can be correctly accounted for.

Soil Resistivity ρ (Ω.m)	Effective Length (m)
1	60
10	180
100	500
1000	1500
Note: See also Formula R9 and Table B.3 for estimates of proximity factors when electrodes are run in parallel.	

Table B.1 Approximate effective lengths for a single earth wire, tape or PILCSWA cable

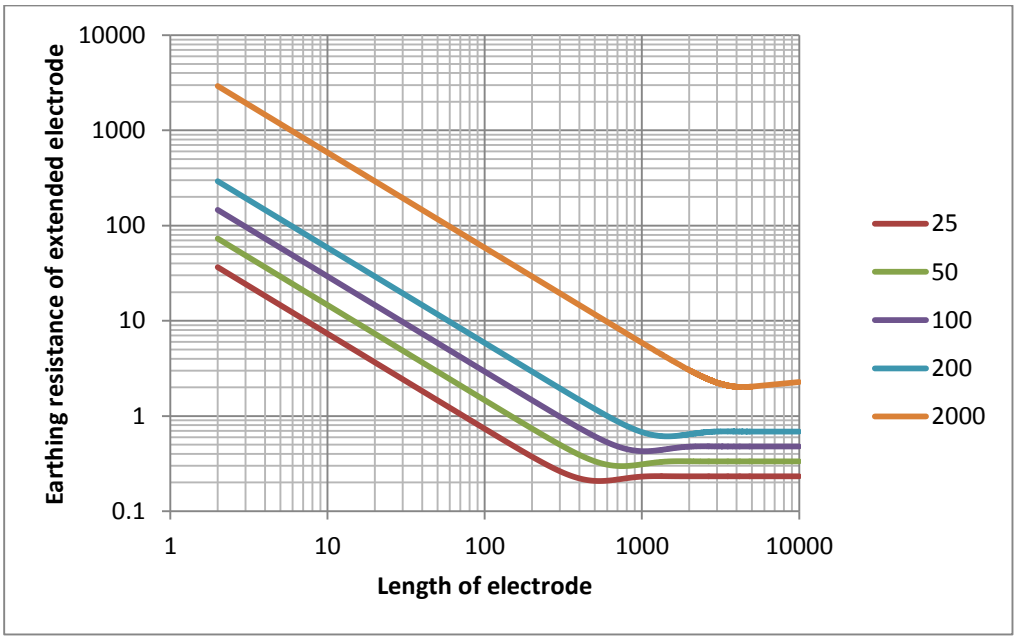

Figure B.2 - Earthing resistance of extended horizontal electrodes

include resistivities in legend – align graph with earlier version

Figure XXX – to be introduced to group for comment. Move to Appendix F or keep here? Additional resistivities to be plotted?

Formula R8 Ladder networks

Long circuits. In all cases, quantities are impedances, not magnitudes.

R8.1 – Long overhead lines with earth wire (BS EN 60909-3, 2010)

$$Z_{\mathbf{CH}} = 0.5Z_Q + \sqrt{(0.5Z_Q)^2 + R_{\mathbf{ET}} \cdot Z_Q}$$

See (BS EN 60909-3, 2010) for description of Z_Q. Appendix G provides calculated values of Z_{CH} for a traditional UK 132kV tower line.

R8.2 – Long cable circuit with distributed earthed nodes (distribution substation electrodes) (BS EN 60909-3, 2010)

$$Z_{\mathbf{CH}} = \frac{Z_1 + \sqrt{{Z_1}^2 + 4 \cdot Z_1 \cdot Z_2}}{2}$$

Where Z_1 = average longitudinal sheath impedance of cable/km connecting the substations (ensure parallel value is used for single core formats such as triplex)

Z_2 = average substation earthing impedance $(0j + R_{\mathbf{B}})\Omega$

Short circuits

R8.3 – short overhead lines with earthwire (typically 5 to 20 towers)

$$Z_{\mathbf{CH}} = \frac{Z_P(Z_{EB} + Z_P)k^n + (Z_P - Z_Q)(Z_{EB} - Z_P + Z_Q)k^{-n}}{(Z_{EB} + Z_P)k^n - (Z_{EB} - Z_P + Z_Q)k^{-n}}$$

(NOTE: all impedances are in complex notation. Formula as provided in (BS EN 60909-3, 2010). Refer to BS EN 60909 for descriptions of symbols because they differ from those used in this document).

For detailed calculations, a discrete ladder network (iterative) routine or computer software should be used. The self and mutual impedance for the earthwire(s) need to be calculated, accounting for their material, cross sectional area and the circuit geometry.

Short underground cable/substation arrangements.

The approach is as follows:

Where there a significant proportion of the cable is PILCSWA, the resistance is calculated based entirely on this using Formula R6.

Where the majority of the cable is XLPE/EPR/Triplex etc., an approximate approach is to treat all the substation earth resistances as being in parallel and inflate the result by 30% to account for the longitudinal sheath impedance. This is sufficiently accurate for typical cable lengths of 200m to 450m and low sheath impedance. If more than 6 substations are be considered, a higher inflation amount needs to be considered. Detailed calculations will be needed if the substation earth resistances approach 1 ohm or less, because the sheath impedance then becomes significant.

For detailed calculations, a discrete ladder network (iterative) routine or computer software should be used.

See also (BS EN 60909-3, 2010) for more details of the calculations for ladder networks, including non-symmetrical arrangements.

Formula R9 Accounting for proximity effects

The resistance R_t in ohms (Ω) of *n* vertically driven rods set *s* metres apart may be calculated from:

$$R_t = \frac{1}{n}\frac{\rho}{2\pi L_{\mathbf{R}}}\left[log_e\left(\frac{8L_{\mathbf{R}}}{d}\right) - 1 + \frac{\lambda L_{\mathbf{R}}}{s}\right]$$

Where:

ρ is the resistivity of soil, in ohm metres (Ω·m);

$L_{\mathbf{R}}$ is the length of the electrode, in metres (m);

n is the number of rods;

s is the spacing between rods

and

λ is a group factor where: $\lambda = 2\,\boldsymbol{\Sigma}(\frac{1}{2} + \cdots + \frac{1}{n})$

NOTE: For larger values of n, λ can be approximated by: $\lambda \simeq 2\ log_e \frac{1.781n}{2.818}$

(Source: Sunde, E.D.: Earth conduction effects in transmission systems, Dover Publications, 1967, pp75-79)

Computer software is best used to account for proximity effects where strip electrodes or PILCSWA type cables run in parallel. An approximation of this effect can be made using proximity factors such as those illustrated in Table B.3 below. Strip electrodes of about 120m in uniform soil are a set distance apart. Each provides a resistance of 2Ω in uniform soil and in the absence of the effect, a parallel resistance of 1Ω would be anticipated. The table shows the higher resistance and proximity factor that applies, clearly increasing when the electrodes are closer together.

Separation distance (m)	Overall resistance (Ω)	Proximity factor
1	1.57	1.57
5	1.38	1.38
10	1.3	1.3
20	1.22	1.22
50	1.125	1.125
100	1.07	1.07

Table B.3 Proximity effect of electrodes run in parallel (calculated using computer software)

Formula R10 Overall earth resistance

$$Z_{\mathbf{E}} = \left(\frac{1}{R_{\mathbf{ES}}} + \frac{1}{R_{\mathbf{H}}} + \frac{1}{Z_{\mathbf{CH1}}} + \frac{1}{Z_{\mathbf{CH2}}} + \cdots\right)^{-1}$$

formula needs more definition. What is R_H? Is it $R_{EH?}$

Formula C1 Current rating formula

For fault currents which are interrupted in less than 5s the cross-section of earthing conductor or earth electrode shall be calculated from the following formula D.1 (IEC 60287 - 3-1 Ed 1.1b, 1999)

$$A = \frac{I}{K}\sqrt{\frac{t_f}{log_e\left(\frac{\Theta_f + \beta}{\Theta_i + \beta}\right)}}$$

(Source: IEC 60949, formula D1)

where:

A is the cross-section in mm^2

I is the conductor current in amperes (RMS value)

t_f	is the duration of the fault in seconds
K	is a constant depending on the material of the current-carrying component; Table D.1 of IEC 60949 provides values for the most common materials assuming an initial temperature of 20°C
β	is the reciprocal of the temperature coefficient of resistance of the current-carrying component at 0°C (see Table below).
Θ_i	is the initial temperature in degrees Celsius. Values may be taken from (IEC 60287-3-1 Ed. 1.1 b : 1999, Electric cables - Calculation of the current rating - Part 3-1: Sections on operating conditions - Reference operating conditions and selection of cable type, 1999). If no value is laid down in the national tables, 20°C as ambient ground temperature at a depth of 1m should be adopted.
Θ_f	Is the final temperature in degrees Celsius

Formula C2 Limit of Surface Current Density formula

$J_{Limit} = 10^{-3}\left(\frac{57.7}{\rho t}\right)^{1/2}$ J_{Limit} needs defining

(Source: Old 41-24, BS 7430 given in A/m²))

where:

I_D	Is the conductor surface current density (amperes/mm²) - I_D is not in equation!!
ρ	is the soil resistivity (Ωm)
t	is the fault duration (seconds)

[Equation to go here for the surface current limit] – EDIFERA to introduce

Surface potential formulae

For substations with separately earthed fence and normal buried grid depths (typically 0.6 m)

Formula P1 External touch potential at the edge of the electrode

$U_{\mathbf{T}} = \frac{k_e \cdot k_d \cdot \rho \cdot I}{L_{\mathbf{T}}}$ (V) should I be I_E?

$$k_e = \frac{1}{\pi}\left(\frac{1}{2} log_e \frac{h}{d} + \frac{1}{2h} + \frac{1}{(0.5 + \mathrm{D})} + \frac{1}{\mathrm{D}}(1 - 0.5^{n-2})\right)$$

k_e is a factor that allows for the effect of a uniformly distributed electrode current over the grid and is given by:

h = grid depth (m)

d = equivalent diameter of conductor = $\frac{\text{circumference of conductor}}{\pi}$ (m)

ρ = soil resistivity (Ω m)

I = total current passing to ground through electrode (A) - should this be I_E?

D = average spacing between parallel grid conductors (m)

$n = (n_A \times n_B)^{1/2}$

where n_A = number of parallel grid conductors in one direction

where n_B = number of parallel grid conductors in the other direction

k_d is a factor, which modifies k_e to allow for the non-uniform distribution of electrode current, and is given by:

$$k_d = \left(0.7 + 0.3\frac{L_{\mathbf{T}}}{L_{\mathbf{p}}}\right)$$

$$\mathrm{k_e} = \frac{1}{\pi}\left(\frac{1}{2}\log_e \frac{\mathrm{h}}{\mathrm{d}} + \frac{1}{2\mathrm{h}} + \frac{1}{(0.5+\mathrm{D})} + \frac{1}{\mathrm{D}}\left(1\text{-}0.5^{\mathrm{n-2}}\right)\right)$$

where

$L_{\mathbf{T}}$ = total length of buried electrode conductor including rods if connected (m)

$L_{\mathbf{p}}$ = perimeter length of buried electrode conductor including rods if connected (m)

I = total current passing to ground through electrode (A) - should this be I_E?

$U_{\mathbf{T}}$ = resulting “touch” potential or, when assessing length L, the safe “touch” potential from Figure 2

Formula P2 External 'Touch' potential at the fence

The ground current density is significantly diminished at the fence compared to that at the edge of the grid electrode. As a result, a new factor, k_f, based on a two-metre separation between fence and grid electrode, is applied in place of k_e in the above formulae.

Hence:

$$\mathrm{U}_{\mathrm{vT(fence)}} = \frac{k_f \cdot k_d \cdot \rho \cdot I}{L}(V) \; or \; L = \frac{k_f \cdot k_d \cdot \rho \cdot I}{E_{touch}}(m)$$

where k_f = 0.26k_e - should *I* be I_E?

Substation with integrally earthed fence

There are two situations to be considered. The first is where the fence is situated at the edge of the substation electrode. The second has a peripheral electrode conductor buried half a metre below the surface, one metre beyond the fence and regularly bonded to it.

External touch potential at fence with no external peripheral electrode

$E_{\mathrm{T}(fence)}$ is the same as $E_{\mathrm{T}(grid)}$ using P1 as above.

Formula P3 External touch potential at fence with external buried peripheral conductor 1m from fence

$$\mathrm{U}_{\mathrm{vT(fence)}} = \frac{k_{fe} \cdot k_d \cdot \rho \cdot I}{L}(V) \; or \; L = \frac{k_{fe} \cdot k_d \cdot \rho \cdot I}{E_{touch}}(m)$$

Where $k_{fe} = \left(\frac{1}{2} log_e \frac{h}{d} - \frac{1}{4} log_e (S^2 + 0.5^2)^2 + \frac{1}{4} log_e (S^4 + S^2)\right)$

h and d are as in formula P1 - what is *L* - it needs definition?

S = distance between the outermost buried grid conductor and the next nearest parallel conductor (m)

Formula P4 Touch voltage within grid (from IEEE80)

Notes:

Formula 16.5.1 (quite complex and has a number of correction factors)

Annex D has simpler formulae.

Formula P5 Step voltage on outside edge of grid

$$U_{vS} = \frac{\rho I_F}{2\pi r}\left(arcsin\frac{r}{x} - arcsin\frac{r+1}{x}\right) \qquad \text{where } r = \frac{\rho}{4R_E}$$

r and x need definition. - is this formula for U_{vS} or U_S?

Formula P6 Voltage profile around earth electrode

COLUMN	P6.1	P6.2	P6.3
ELECTRODE DESCRIPTION	HEMISPHERE	VERTICAL ROD	BURIED GRID
CONFIGURATION	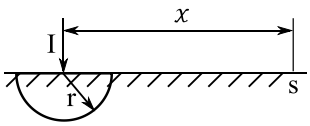	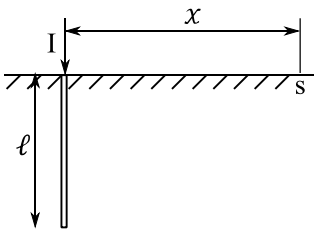	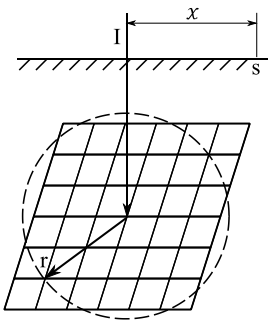
VOLTAGE ON THE SURFACE OF THE GROUND AT POINT 'S' WITH RESPECT TO TRUE EARTH	$V_S = \frac{\rho I}{2\pi x}$	$V_S = \frac{\rho I}{2\pi \ell} \log_e \left(\frac{\ell}{x} + \sqrt{1 + \frac{\ell^2}{x^2}} \right)$	$V_S = \frac{\rho I}{2\pi \ell} \arcsin \frac{r}{x}$ where: $r = \frac{\rho}{4R_g}$ and $\arcsin \frac{r}{x}$ is in radians R_g not defined

Formula P7 Calculation of specific external potential contours

$$\mathrm{Z}_x = \sqrt{\frac{A}{\pi}}\left[\left(sin\frac{V_x\,\pi}{2U_{\mathbf{E}}}\right)^{-1} - 1\right]$$

where Z_x is the distance in metres to a point where the surface potential is V_x volts.

$$\mathrm{Z}_{430} = \sqrt{\frac{A}{\pi}}\left[\left(sin\frac{215\pi}{U_{\mathbf{E}}}\right)^{-1} - 1\right]$$

$$\mathrm{Z}_{650} = \sqrt{\frac{A}{\pi}}\left[\left(sin\frac{325\pi}{U_{\mathbf{E}}}\right)^{-1} - 1\right]$$

where Z_{430} and Z_{650} are in metres.

A = superficial area of grid electrode in square metres.

$U_{\mathbf{E}}$ = earth potential rise in volts.

These formulae apply on the basis that the earthing installation may be treated as equivalent to a symmetrical grid.

Substation fences are usually earthed independently from the main earthing system and may be up to 2m from it. By using the above formulae as the “hot zone” radii, a factor of safety is introduced when they are applied measured from the substation fence. Some discretion may be necessary in assessing the “hot zone” radius of a substation where the fence is bonded to the earthing installation or there is a large distance from the fence to the edge of the earthing system.

Clearly this formula does not apply when $U_{\mathbf{E}}$ is lower than the voltage contour of interest.

APPENDIX C – Earthing design methodology

COPY FINAL VERSION FROM 41-24 when complete

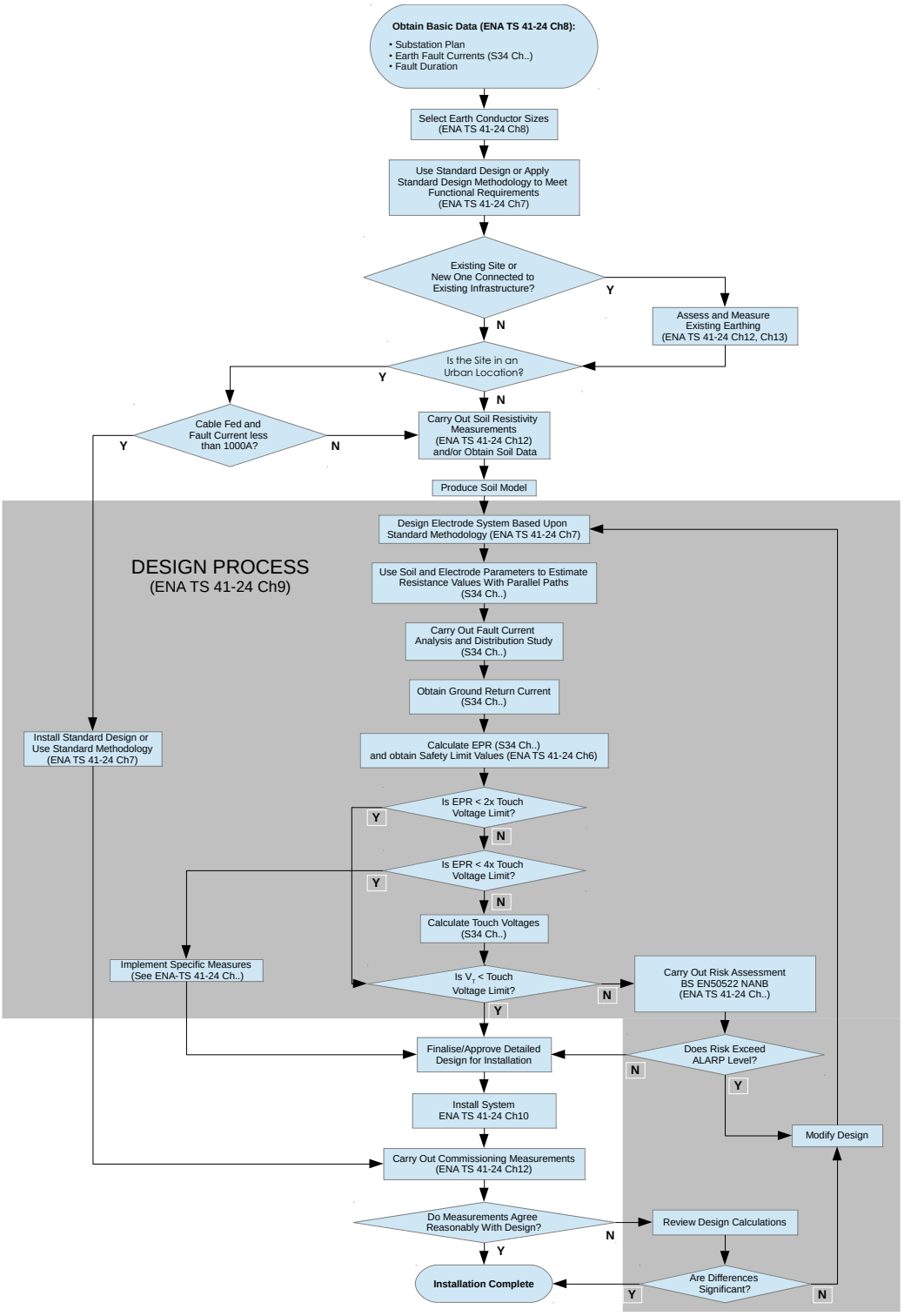

APPENDIX D – Formulae for determination of ground return current for earth faults on metal sheathed cables

The current in the core of a single-core cable or the unbalance of current in the cores of a multicore cable induces a voltage in the metallic sheath/armour of the cable. If the sheath/armour is connected to earth at each end of its length, a current will be driven through the sheath/armour earth loop which constitutes part of the earth fault current returning from the fault, the remainder being that returning in the ground. The quantity of current returning in the cable sheath/armour is, inter alia, dependent on the location of the cable in the system with respect to the source of fault current infeed and to the position of the fault as well as on the values of the sheath/armour terminating earth resistances.

Formulae for the computation of the ground current are given below, in respect of a cable terminated and earthed at points A and B.

The arrangements considered are illustrated in Figures D.1 to D.4.

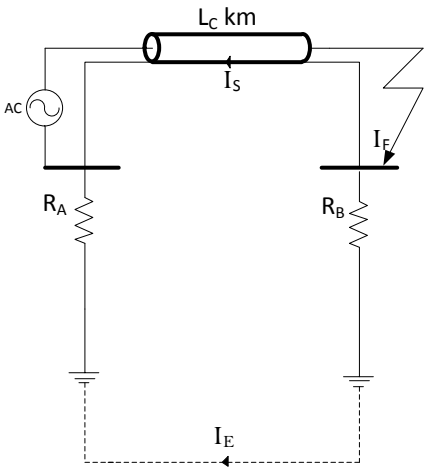

[Lc symbols etc]

Figure D.1 Cable, Local Source of Fault at Cable End.

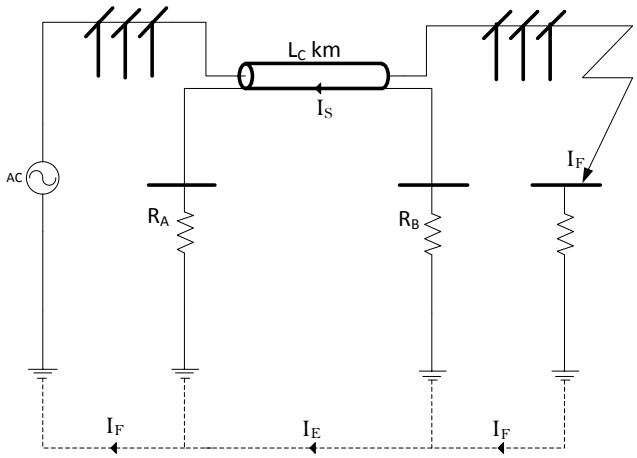

Figure D.2 Line-Cable-Line, Remote Source and Remote Fault

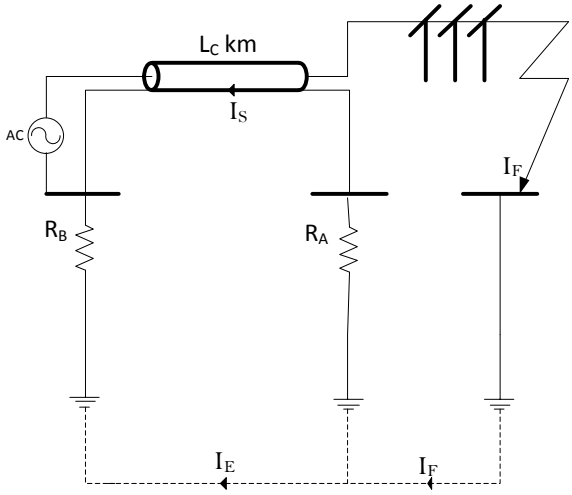

Figure D.3 Cable-Line, Local Source and Remote Fault

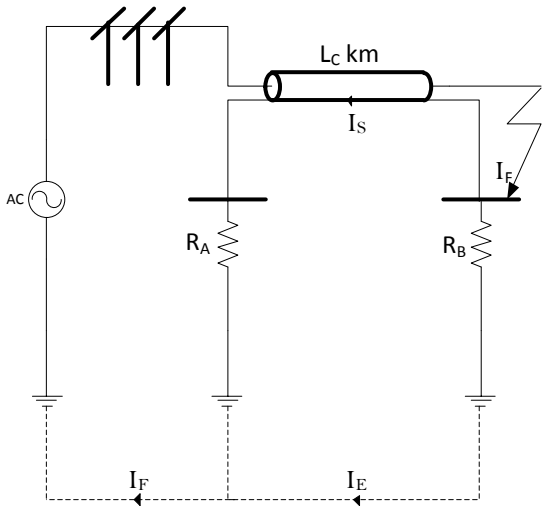

Figure D.4 Line-Cable, Remote Source and Fault at Cable End

1a. Three-core cable (unarmoured), source of infeed at point A and fault at point B. See diagram Figure D.1.

$$I_{\mathbf{ES}} = -I_{\mathbf{F}}\left[\frac{l\left(z_c - z_{mp,c}\right)}{lz_c + R_{\mathbf{A}} + R_{\mathbf{B}}}\right] = -I_{\mathbf{F}}\left[\frac{lr_c}{lz_c + R_{\mathbf{A}} + R_{\mathbf{B}}}\right]$$

1b. Three-core cable (armoured), source of infeed at point A and fault at point B. See Figure D.1.

$$I_{\mathbf{ES}} = -I_{\mathbf{F}}\left[\frac{l\left(\frac{r_c \times r_a}{r_c + r_a}\right)}{l\left(\left(\frac{r_c \times r_a}{r_c + r_a}\right) + r_e + j\omega(L_c + L_a)\right) + R_{\mathbf{A}} + R_{\mathbf{B}}}\right]$$

2a. Three-core cable (unarmoured), source of infeed beyond point A and fault beyond point B. See Figure D.2.

$$I_{\mathbf{ES}} = -I_{\mathbf{F}}\left[\frac{l\left(z_c - z_{mp,c}\right) + R_{\mathbf{A}} + R_{\mathbf{B}}}{lz_c + R_{\mathbf{A}} + R_{\mathbf{B}}}\right] = -I_{\mathbf{F}}\left[\frac{lr_c + R_{\mathbf{A}} + R_{\mathbf{B}}}{lz_c + R_{\mathbf{A}} + R_{\mathbf{B}}}\right]$$

2b. Three-core cable (armoured), source of infeed beyond point A and fault beyond point B. See Figure D.2.

$$I_{\mathbf{ES}} = -I_{\mathbf{F}}\left[\frac{l\left(\frac{r_c \times r_a}{r_c + r_a}\right) R_{\mathbf{A}} + R_{\mathbf{B}}}{l\left(\left(\frac{r_c \times r_a}{r_c + r_a}\right) + r_e + j\omega(L_c + L_a)\right) + R_{\mathbf{A}} + R_{\mathbf{B}}}\right]$$

3a. Three-core cable (unarmoured), source of infeed beyond point A and fault at point B, or source of infeed at point B and fault beyond point A. See Figures D.3 and D.4.

$$I_{\mathbf{ES}} = -I_{\mathbf{F}}\left[\frac{l\left(z_c - z_{mp,c}\right) + R_{\mathbf{A}}}{lz_c + R_{\mathbf{A}} + R_{\mathbf{B}}}\right] = -I_{\mathbf{F}}\left[\frac{lr_c + R_{\mathbf{A}}}{lz_c + R_{\mathbf{A}} + R_{\mathbf{B}}}\right]$$

3b. Three-core cable (armoured), source of infeed at point A and fault at point B, or source of infeed at point B and fault beyond point A. See Figures 11 and 13.

$$I_{\mathbf{ES}} = -I_{\mathbf{F}}\left[\frac{l\left(\frac{r_c \times r_a}{r_c + r_a}\right)R_{\mathbf{A}}}{l\left(\left(\frac{r_c \times r_a}{r_c + r_a}\right) + r_e + j\omega(L_c + L_a)\right) + R_{\mathbf{A}}}\right]$$

4. Three single-core cables, source of infeed at point A and fault at point B; the cable sheaths are referenced 1, 2, 3. See diagram Fig. 14, Evaluate sheath currents 11, 12 and 13 and determine I_{ES} from the following:

$$\begin{bmatrix} (R_{\mathbf{A}} + lz_{c1} + R_{\mathbf{B}}) & (R_{\mathbf{A}} + lz_{m1,2} + R_{\mathbf{B}}) & (R_{\mathbf{A}} + lz_{m1,3} + R_{\mathbf{B}}) \\ (R_{\mathbf{A}} + lz_{m1,2} + R_{\mathbf{B}}) & (R_{\mathbf{A}} + lz_{c2} + R_{\mathbf{B}}) & (R_{\mathbf{A}} + lz_{m2,3} + R_{\mathbf{B}}) \\ (R_{\mathbf{A}} + lz_{m1,3} + R_{\mathbf{B}}) & (R_{\mathbf{A}} + lz_{m2,3} + R_{\mathbf{B}}) & (R_{\mathbf{A}} + lz_{c3} + R_{\mathbf{B}}) \end{bmatrix}\begin{bmatrix} I_1 \\ I_2 \\ I_3 \end{bmatrix} = -I_{\mathbf{F}}\begin{bmatrix} (R_{\mathbf{A}} + lz_{mp,1} + R_{\mathbf{B}}) \\ (R_{\mathbf{A}} + lz_{mp,2} + R_{\mathbf{B}}) \\ (R_A + lz_{mp,3} + R_B) \end{bmatrix}$$

5. Three single-core cables, source of infeed beyond point A and fault beyond point B. See diagram Fig. 15.

Evaluate sheath currents 11, 12 and 13 and determine I_{ES} from the following: note- this will only determine I_F?

$$\begin{bmatrix}\text{IMPEDANCE COEFFICIENTS} \\ \text{AS IN (4) ABOVE}\end{bmatrix}\begin{bmatrix} I_1 \\ I_2 \\ I_3 \end{bmatrix} = -I_{\mathbf{F}}\begin{bmatrix} (lz_{mp,1}) \\ (lz_{mp,2}) \\ (z_{mp,3}) \end{bmatrix}$$

6. Three single-core cables, source of infeed beyond point A and fault at point B, or source of infeed at point B and fault beyond point A. See diagrams Figs. 16 and 17.

Evaluate sheath currents 11, 12 and 13 and determine I_{ES} from the following: note -this will only determine I_F?

$$\begin{bmatrix}\text{IMPEDANCE COEFFICIENTS} \\ \text{AS IN (4) ABOVE}\end{bmatrix}\begin{bmatrix} I_1 \\ I_2 \\ I_3 \end{bmatrix} = -I_{\mathbf{F}}\begin{bmatrix} (lz_{mp,1} + R_{\mathbf{B}}) \\ (lz_{mp,2} + R_{\mathbf{B}}) \\ (z_{mp,3} + R_{\mathbf{B}}) \end{bmatrix}$$

The parameters used in the above formulae are as given in the list of symbols shown in Section 3.1 or as defined below.

The quantities z_c ; z_{c1} ; z_{c2} ; z_{c3} are the sheath to earth self impedances at 50 Hz.

Equation below doesn't make sense - is it Z_c that's being calculated? - also ohms/km needs bringing out of equation?

$$= r_c + \left(49.4 + j62.8\, log_e \frac{93.2\sqrt{\rho}}{c_g}\right) \times \frac{10^{-3}\Omega}{km}$$

where c_g is the GMR (Geometric Mean Radius) of the sheath in metres.

The quantity R_E is the resistive component of the ground return path of the sheath to earth self impedance.

$$= 5\pi^2 10^{-3}\Omega/\mathrm{km}$$

$$= \left(0.2\, log_e \frac{93.2\sqrt{\rho}}{c_g}\right) \times 10^{-3}\Omega/km$$

The quantity L_c is the inductive component of the sheath to earth self impedance.

The quantity L_a is the effective inductance of the armour wire.

$$L_a = \left(\frac{0.4\mu t}{d_i + t}\right) \times 10^{-3} \text{ H/km}$$

Where t is the thickness of the armour wire in metres.

d_i is the internal diameter of the armour wire in metres.

μ is the relative permeability of the armour wires

The quantities $z_{mp,c}$; $z_{mp,1}$; $z_{mp,2}$ and $z_{mp,3}$ are the faulty conductor to sheath mutual impedances and $z_{m1,2}$; $z_{m1,3}$ and $z_{m2,3}$ are the sheath-to-sheath mutual impedances at 50 Hz.

Equation below doesn't make sense - is it Z_c that's being calculated?

$$= \left(49.4 + j62.8\, log_e \frac{93.2\sqrt{\rho}}{d}\right) \times 10^{-3} \ \Omega\text{/km}$$

where *d* is the centre to centre distance in metres between the conductors/sheaths.

In calculating $z_{mp,c}$; $z_{mp,1}$; $z_{mp,2}$ and $z_{mp,3}$ the value of d has been substituted for c_g (where c_g is the GMR of the sheath in metres).

In the following table, the values of z_c and $z_{mp,c}$ for three-core cables in common use are listed for an assumed value of ρ of 100 Ωm.

System Voltage	Cable Type (3-core/triplex)	Impedances in Ω/km					
		z_c	$z_{mp,c}$	z_c	$z_{mp,c}$	z_c	$z_{mp,c}$
11 kV	Conductor CSA	0.1 in²		185 mm²		300 mm²	
	PILC SWA	1.221 ∠33.24°	0.672 ∠85.8°	1.099 ∠41.6°	0.674 ∠85.8°	0.873 ∠49.1°	0.622 ∠85.8°
	PILC	1.228 ∠33.77°	0.686 ∠85.88°	0.999 ∠41.66°	0.667 ∠85.77°	0.858 ∠49.53°	0.656 ∠85.69°
	PICAS			0.677 ∠77.33°	0.662 ∠85.6°	0.658 ∠79.6°	0.649 ∠85.7°
	TRIPLEX			0.89 ∠51.8°	0.703 ∠86°	0.875 ∠52°	0.691 ∠85.92°
33 kV	Conductor CSA	0.2 in²		185 mm²		300 mm²	
	PILC SWA	0.753 ∠58.62°	0.646 ∠85.62°	0.769 ∠56.4°	0.651 ∠85.7°	0.735 ∠60.3°	0.641 ∠85.6°
	PILC	0.753 ∠58.63°	0.646 ∠85.63°	0.771 ∠56.35°	0.644 ∠85.62°		
	PICAS			0.684 ∠74°	0.659 ∠85.7°	0.667 ∠76.3°	0.65 ∠85.7°
	TRIPLEX			0.87 ∠51.8°	0.683 ∠85.87°	0.856 ∠51.5°	0.672 ∠85.8°
132 kV	Conductor CSA			185 mm²		300 mm²	
	PILC SWA			0.652 ∠76°	0.635 ∠85.6°	0.645 ∠76.7°	0.63 ∠85.5°
	TRIPLEX* (135mm² Cu screen)			0.63 ∠80.71°	0.625 ∠85.48°	0.67 ∠74.78°	0.649 ∠85.65°
	PICAS			0.636 ∠79.6°	0.628 ∠85.5°	0.63 ∠80.2°	0.623 ∠85.5°
	PILC			0.771 ∠56.35°	0.644 ∠85.62°	0.725 ∠60.98°	0.637 ∠85.57°

Table D.1 Self and mutual impedances for a sample of distribution cables

NOTE 1: In all cases the phase angle is negative

*NOTE 2: For triplex cables, the three core equivalent cable data may be used, in equations Dxx; this neglects the mutual coupling between each core and neighbouring cores/sheaths and is slightly less accurate than the use of equation XXX with appropriate Zm,p values)

3core cables – figure – equation – table (of self and mutual)

Then single core cables -equation. No data for single core cables

PILCSWA = paper insulated lead sheath covered steel wire armour

PILC= paper insulated lead sheath covered

PICAS= Paper insulated corrugated aluminium sheathed

TRIPLEX= 3 x single core cables with XLPE or EPR insulation and 35mm^2 stranded copper screen/cable (11kV and 33kV) or 135mm^2 screen (132kV)

APPENDIX E – Ground current for earth faults on steel tower supported circuits with an aerial earthwire

Values of ground current I_E as a percentage of I_F and corresponding phase angle $Ø_E$ with respect to I_F for 132 kV, 275 kV and 400 kV line constructions

Type of Line and Conductor Size (mm^2)	I_E as a percentage of I_F	Phase Angle of I_E with respect to I_F ($Ø_E$ degrees lead)
132 kV (L4) (1 × 175)	70.8	171
132 kV (L7) (2 × 175)	63.6	177
275 kV (L3) (2 × 175)	66.9	178
275 kV (L2) (2 × 400)	68.6	178
400 kV (L8) (2 × 400)	70.0	179
400 kV (L6) (4 × 400)	69.2	179
400 kV (L9) (4 × 400)	64.0	179

APPENDIX F – Chart to calculate resistance of horizontal electrode

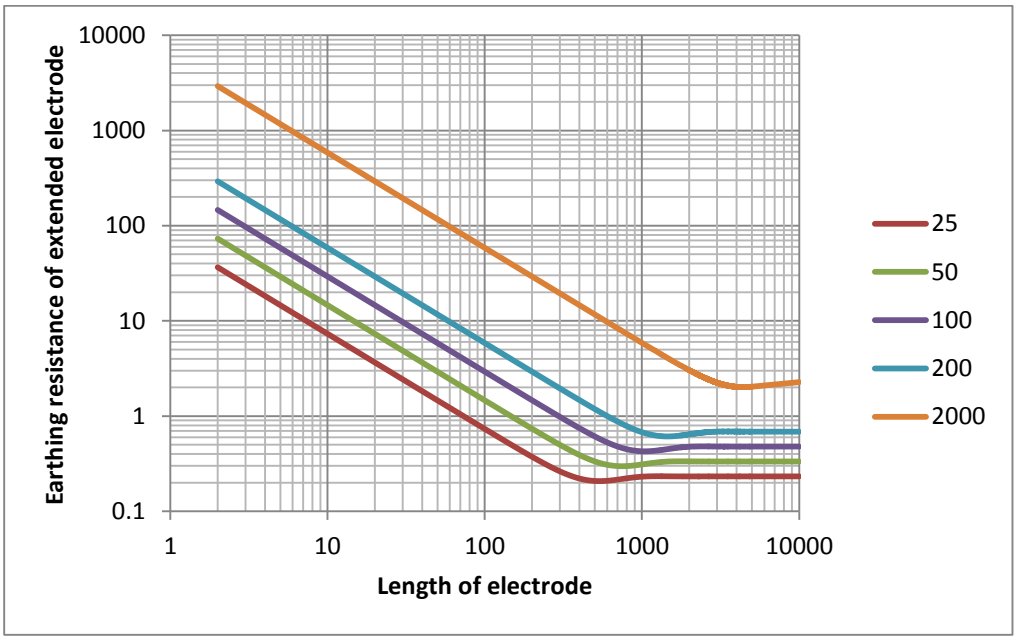

Appendix G

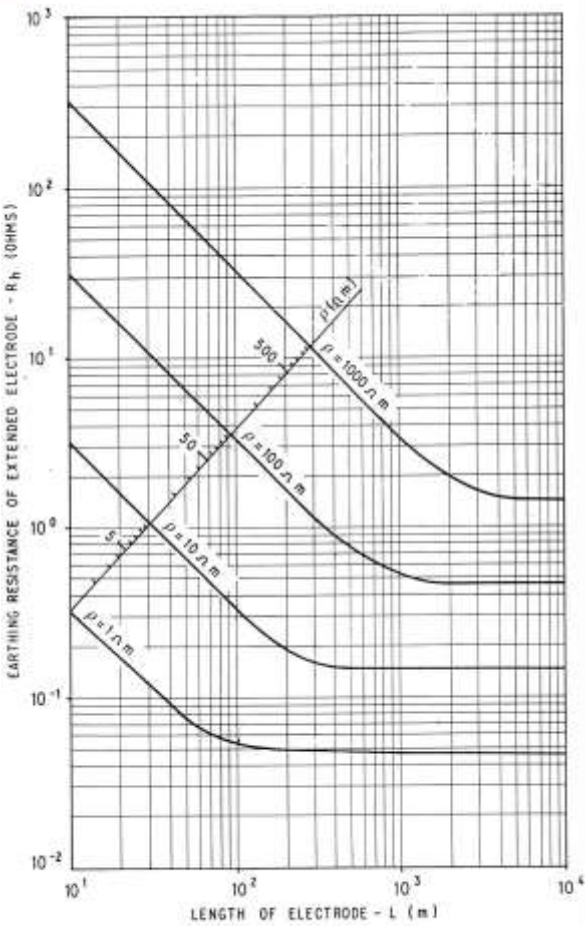

FIGURE 4
EARTHING RESISTANCE OF EXTENDED BURIED HORIZONTAL ELECTRODE (e.g. WIRE, STRIP OR EFFECTIVELY UNINSULATED CABLE SHEATH) AS A FUNCTION OF LENGTH AND SOIL RESISTIVITY

x 42

APPENDIX G – Chain impedance of standard 132kV earthed tower lines

The table below provides chain impedances for a 132kV L4 type construction with three towers/km and a horse earth wire (approx 70mm^2 aluminium ACSR, to BS 215 pt5 1970).

Longitudinal impedance of earth wire is 0.443 + j 0.757 ohm/km (calculated using Carson Clem formula).

The values assume more than 20 towers in series.

Footing resistance (ohm)	Chain impedance r + j x ohm	Chain impedance Z_{CH} ∠° ohm
1	0.543+j0.414	0.683∠37.35
2	0.737+j0.52	0.902∠35.21
3	0.886+j0.603	1.072∠34.24
4	1.012+j0.674	1.215∠33.7
5	1.122+j0.736	1.342∠33.26
6	1.222+j0.793	1.457∠32.96
7	1.314+j0.845	1.562∠32.73
8	1.4+j0.893	1.661∠32.55
9	1.48+j0.939	1.753∠32.39
10	1.556+j0.982	1.841∠32.26
15	1.89+j1.172	2.224∠31.82
20	2.17+j1.333	2.547∠31.55
25	2.42+j1.474	2.832∠31.37
40	3.039+j1.83	3.547∠31.05

APPENDIX H – Sample calculations showing the effect on the ground return current for change in the separation distance between three single core cables laid flat or in trefoil

For the studies, three representative cables were selected for 11kV and 132kV voltage levels. Their details are given in Table H.1.

Operating voltage (kV)	Cable number	Phase conductor size mm²	Insulation type	Insulation thickness mm	Core / Screen type + size mm²	Reference cable code
132	1	630	XLPE	15	Lead	132_01_12
132	2	630	XLPE	21	Lead	132_01_13
132	3	630	XLPE	15	Copper wire 135	132_01_17
11	4	70	EPR		Copper wire 12	11_3_SZ
11	5	300	EPR		Copper wire 35	11_225_EPR
11	6	300	XLPE		Copper wire 70	11_21_S

Table H.1 Technical details of cables modelled

The geometric arrangements considered are trefoil and flat. They are analysed on the basis that they are installed such that the cables are touching and again assuming they are a symmetrical distance 3 x D apart (where D is the outer cable diameter in mm). See Table H.2 for details.

	TREFOIL	FLAT
Adjacent	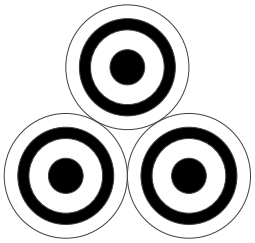	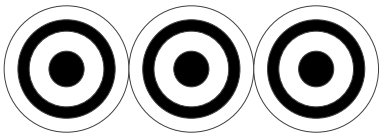
Distance with 3xD	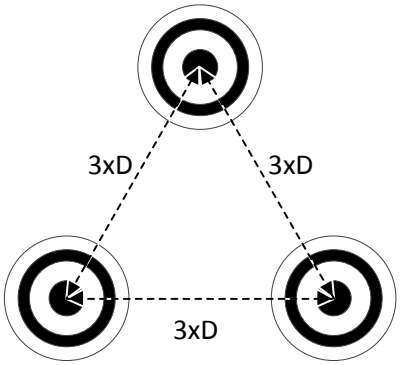	

Table H.2 The geometric placement of cables

The 132kV cables were selected to show the difference that the sheath/screen configuration makes for the same size phase conductor. One standard cable contains a tubular conductor made of aluminum foil in addition to its stranded copper conductor. The cross-sectional view for this cable (trefoil format) is shown in Figure H.1.

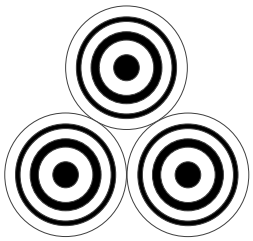

Figure H.1 Cross-sectional view for Cable 3

The circuit used to simulate the different cable arrangements and determine the effect on the earth return current is shown in Figure H.2.

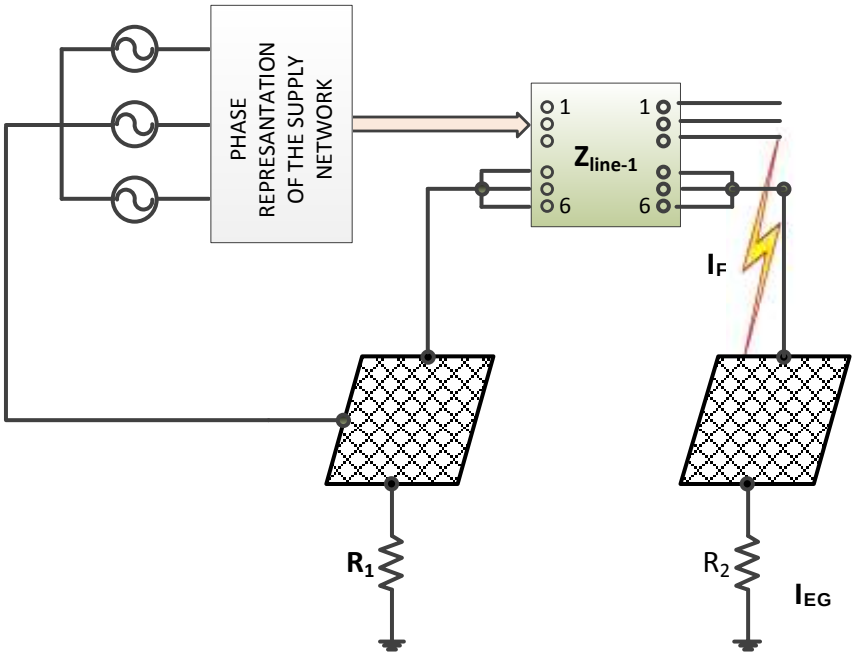

Figure H.2 Circuit used for analysis purposes

Using the circuit described, studies were carried out for each of the cables of Table H.1, and the ground return current calculated for a set range of cable lengths. For each cable, four sets of studies were carried out, i.e. one for each physical arrangement of the individual cables.

The results are shown in Figures H.3 and H.4, with the ground return current I_{ES} shown as a percentage of the total earth fault current I_F.

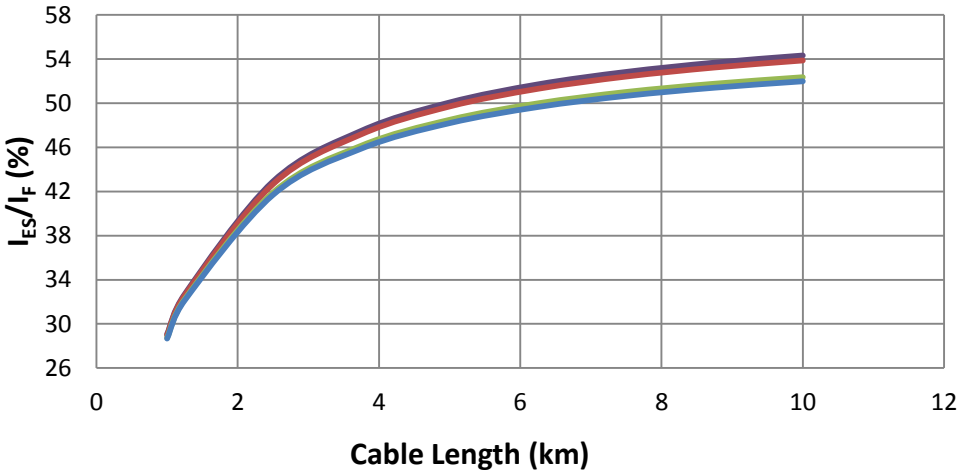

Cable 1: 630mm² with 15mm XLPE, lead sheathed

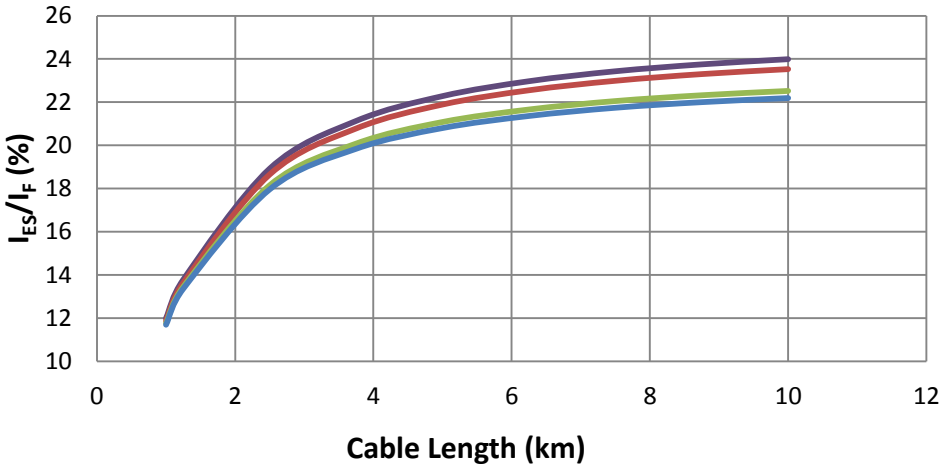

Cable 2: 630mm² with 21mm XLPE, lead sheathed

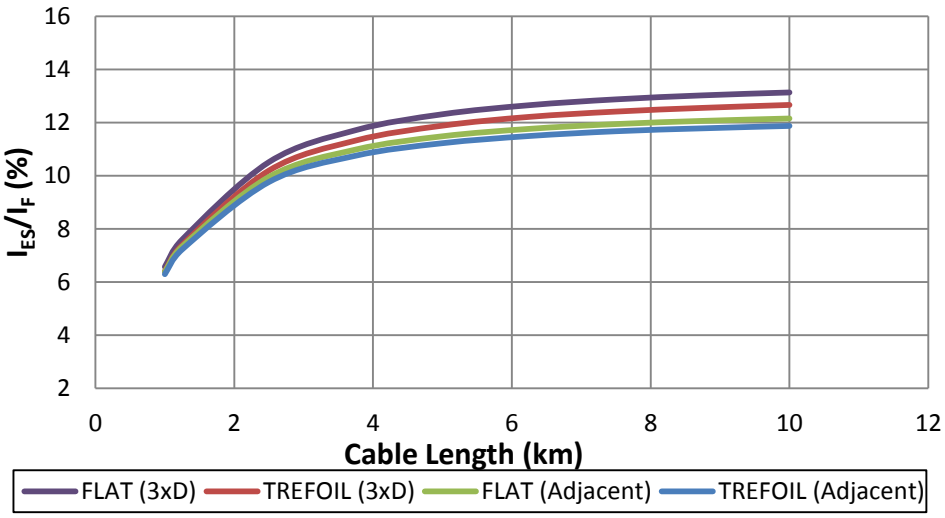

Cable 3: 630mm² with 15mm XLPE and composite screen/sheath (135mm²Cu and 45mm² Al)

Figure H.3 Ground return current (I_{ES}) as a percentage of (I_F) against circuit length for different 132kV cable installation arrangements

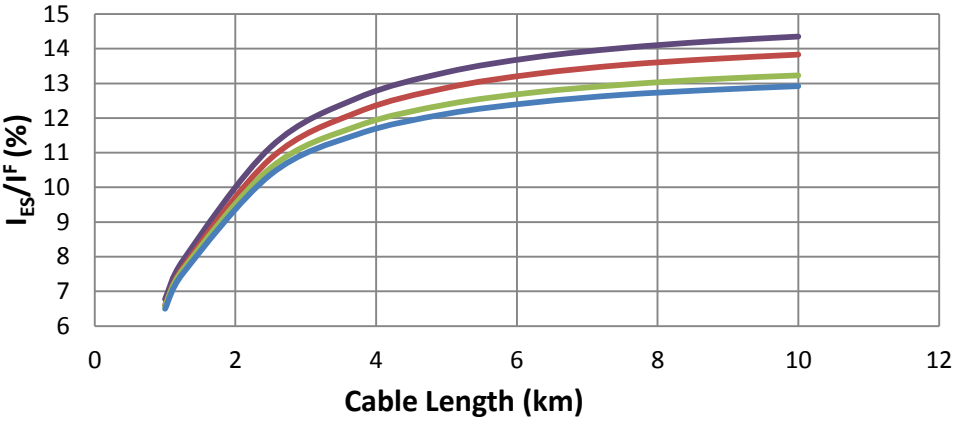

Cable 4: (70mm² with 12mm² Cu screen)

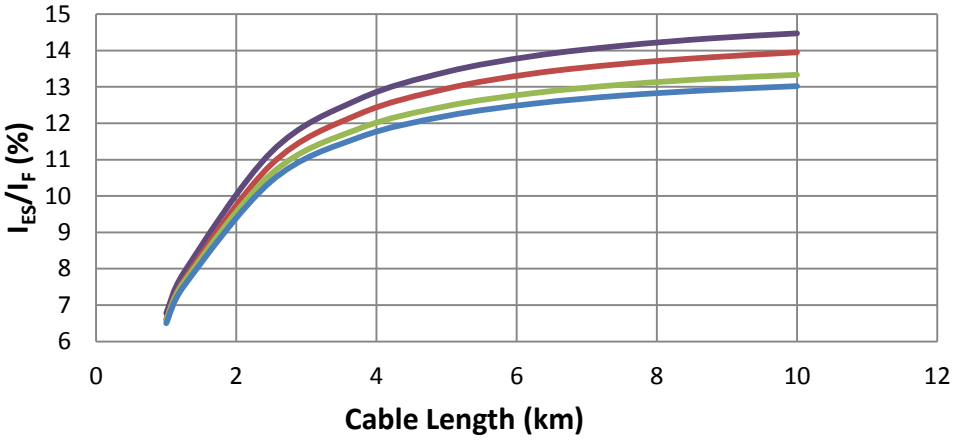

Cable 5: (300mm² with 35mm² Cu screen)

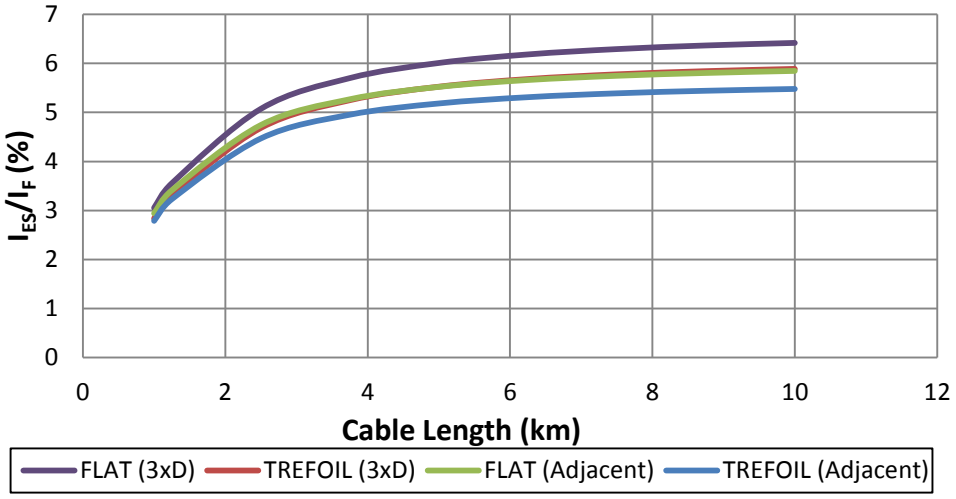

Cable 6: (300mm² with 70mm² Cu screen)

Figure H.4 Ground return current (I_{ES}) as a percentage of (I_F) against circuit length for different 11kV cable installation arrangements

The results show that earth return current increases when the distance between adjacent cables is increased. The percentage increase in I_{ES} compared to the touching trefoil arrangement is shown in tables A8.3 and A8.4. The difference is seen to increase with circuit length and cable separation distance.

	Cable 1		Cable 2		Cable 3	
Circuit length	1 km	10 km	1 km	10 km	1 km	10 km
Difference trefoil (3xD) - trefoil (%)	1.7	7.0	1.6	7.1	1.8	7.5
Difference flat - trefoil (%)	1.3	2.4	1.3	2.4	5.5	6.7
Difference flat (3xD) - trefoil (%)	4.2	11.0	4.2	11.1	9.5	17.1

Table H.3 Effect of physical cable arrangement on ground return current I_{ES} for 132 kV cables

	Cable 4		Cable 5		Cable 6	
Circuit length	1 km	10 km	1 km	10 km	1 km	10 km
Difference trefoil (3xD) - trefoil (%)	1.1	3.6	1.5	6.0	1.7	6.7
Difference flat - trefoil (%)	0.2	0.7	0.6	1.5	1.4	2.4
Difference flat (3xD) - trefoil (%)	1.4	4.5	2.6	8.1	4.4	10.6

Table H.4 Effect of physical cable arrangement on ground return current I_{ES} for 11kV cables

Conclusions:

From figures H.3 and H.4, the following can be deduced:-

Touching trefoil is the most effective arrangement in terms of minimising the ground return current. This is as expected, due to the more symmetrical arrangement and its impact on maximising mutual coupling effects. The ground return current increases in all cases in the order touching trefoil, touching flat, 3 x D trefoil and 3 x D flat.

The difference between trefoil and flat arrangements is less than 0.5% of the total and can be disregarded for most studies.

Increasing the separation between the individual cables generally increases the ground return current by less than 1% of the total.

The decrease in cable core insulation thickness from 21mm (in older cables) to 15mm does reduce the ground return current, but by an insignificant amount in relation to other factors (such as measurement errors) and can be ignored for the majority of cases.

The two dominant factors influencing the ground return current in these studies are the circuit length and the electrical conductivity of the sheath/screen. The latter is most visibly seen when comparing the 132kV composite screen (copper and aluminium) against a similar cable

with a lead screen. The ground return current is more than doubled for the latter. The same effect is apparent with the 11kV cables and cable 4 with its relatively small screen of 12mm^2/cable shows the importance of considering the screen size because the ground return current can reach almost 54% for this cable.

Tables H.3 and H.4 are included for completeness and show the increase in the actual ground return current with changes in physical arrangement, as a percentage of the ground return current for the touching trefoil arrangement.

APPENDIX I – Transfer potential to distributed LV systems

I.1 Background

This issue relates to the transfer of voltage from HV systems to LV systems, when the LV system consists of multiple electrodes, as described in Section 5.3.

I.2 Examples

(a) Equal LV Electrode Earth Resistances

It is useful to consider a worked example where assumed typical values have been used and the transfer voltage has been calculated. Figure I.1 shows the circuit together with the calculated parameters.

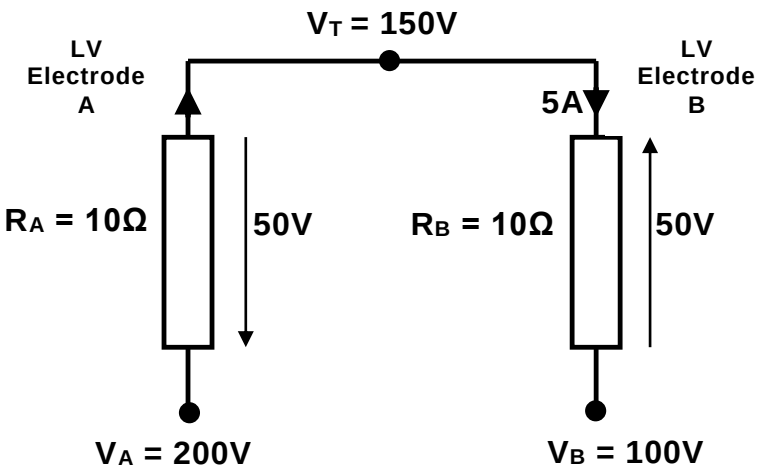

Figure I.1 Example – Two Electrodes of Equal Resistance

From Figure I.1, the surface potential experienced by electrodes A and B effectively act as voltage sources. Because electrodes A and B are connected together via an above ground conductor (assumed to have negligible resistance compared to the earth resistances) the potential difference of 100V across the total series resistance of 20Ω causes a current of 5A to circulate through the electrodes. This creates a voltage drop of 50V across the earth resistance of A which is negative with respect to the local surface potential. This reduces the local electrode potential (by 50V with respect to the local soil potential). Conversely at electrode B there is a 50V potential drop across the earth resistance which increases the electrode potential by 50V with respect to the local soil potential. The transfer potential on the combined LV electrode system is 150V.

This is consistent with the previous work and explains the changes in surface potential contours around combined LV electrodes.

(b) Unequal LV Electrode Earth Resistances

Figure I.2 shows a similar example but where Electrode B has an earth resistance 5 times lower than Electrode A.

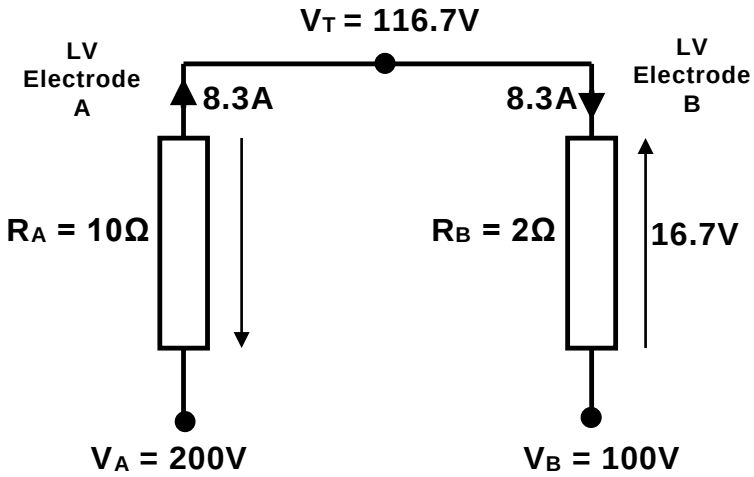

Figure I.2 Example - Two Electrodes of Unequal Resistance

It can be seen that the potential on the combined LV electrode is much lower than the average value of 150V. Because Electrode B has a much lower resistance it has a smaller volt drop across it and so the combined electrode potential is closer to the voltage on Electrode B.

(c) More than Two LV Electrodes

A similar calculation process can be applied to combinations of more than two LV electrodes. The equation below provides the combined electrode potential for three electrodes, A, B & C.

$$V_{\mathbf{T}} = \frac{V_{\mathbf{A}}(R_{\mathbf{B}}R_{\mathbf{C}}) + V_{\mathbf{B}}(R_{\mathbf{A}}R_{\mathbf{C}}) + V_{\mathbf{C}}(R_{\mathbf{A}}R_{\mathbf{B}})}{(R_{\mathbf{B}}R_{\mathbf{C}}) + (R_{\mathbf{A}}R_{\mathbf{C}}) + (R_{\mathbf{A}}R_{\mathbf{B}})}$$

The equation below allows a similar calculation to be made for four combined LV electrodes, A, B, C & D.

$$V_{\mathbf{T}} = \frac{V_{\mathbf{A}}(R_{\mathbf{B}}R_{\mathbf{C}}R_{\mathbf{D}}) + V_{\mathbf{B}}(R_{\mathbf{A}}R_{\mathbf{C}}R_{\mathbf{D}}) + V_{\mathbf{C}}(R_{\mathbf{A}}R_{\mathbf{B}}R_{\mathbf{D}}) + V_{\mathbf{D}}(R_{\mathbf{A}}R_{\mathbf{B}}R_{\mathbf{C}})}{(R_{\mathbf{B}}R_{\mathbf{C}}R_{\mathbf{D}}) + (R_{\mathbf{A}}R_{\mathbf{C}}R_{\mathbf{D}}) + (R_{\mathbf{A}}R_{\mathbf{B}}R_{\mathbf{D}}) + (R_{\mathbf{A}}R_{\mathbf{B}}R_{\mathbf{C}})}$$

Further equations for more than four combined LV electrodes can easily be produced by continuing this pattern and would be best implemented via a computer programme subroutine loop.

I.3 Discussion

This method has been found to provide a conservative estimate of transfer potential to LV earthing systems when the HV earth resistance is reasonably accurate, ideally determined by measurement. If calculated, conservative results are obtained if the equation for the earth resistance of a hemispherical electrode is used.

The above method may also be applied to a horizontal electrode which may be represented as a series of equally distributed vertical rods along its route. The coarsest representation is to

model the horizontal electrode as two short vertical rods, the first at the point on the electrode nearest the HV electrode and the second at the furthest point. This method provides a conservative estimate of the transfer potential to the LV electrode. The greater number of rods used to model the horizontal electrode, the more accurate the calculated transfer potential becomes.

The method described above has been found to be reasonably accurate (and conservative) for soils with uniform resistivity and those where there is a lower resistivity deeper layer. Care should be taken when applying to soils where there is a high resistivity deeper layer, e.g. underlying rock, as transfer potentials may be underestimated and additional safety factors may need to be applied.

Where there is a distributed HV electrode system, e.g. where there are extended HV cables with bare sheaths in contact with the soil, the accuracy of this approach will depend on the location of the LV electrodes relative to the HV electrode. The approach may be valid if the LV electrodes are in the opposite direction to the HV electrode otherwise the transfer potential will need to be calculated by more detailed methods.

For detailed analysis of complex HV or LV electrode shapes and highly non-uniform soil resistivity structures the use of computer simulation software will be required.

I.4 Application to real systems

The fact that the transfer potential is governed by the distance to the ‘centre of gravity’ of the LV electrode system from the HV electrode has now been established, can help with the LV electrode design to minimise transfer potential. From this perspective, the best method is to install dominant parts of the LV electrode system as far as practicable from the HV electrode, i.e. towards the extremities of the LV system.

I.5 Worked examples

Arrangement 1: Pole-Mounted 11kV/LV Substation

A typical pole-mounted 11kV substation arrangement is shown in Figure 5.5. The HV and LV earthing systems are separated; in this example the transformer LV neutral/earth electrode is located 9m away from the transformer HV earth electrode. A service cable provides an LV supply to a dwelling located 50m away from the HV earth electrode and there is a LV PME earth electrode at the property.

The HV Earth Electrode is assumed to be a 3.6m earth rod of 16mm diameter and the soil resistivity is assumed to be 75Ωm.

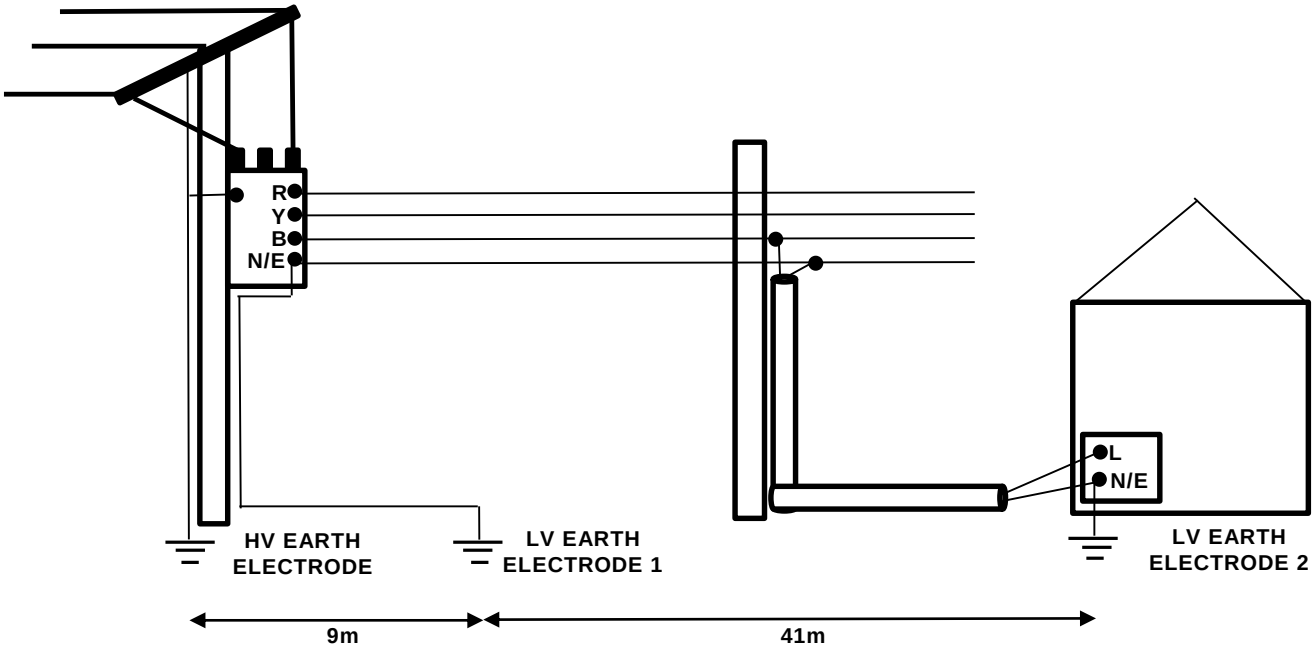

Figure I.3 Example Pole-Mounted 11kV Substation Arrangement and LV Supply to a Dwelling

Using Formula R1 from Appendix B, the HV electrode earth resistance is calculated to be 21.5 Ω. An earth fault current of 200A is assumed to flow and is assumed to be disconnected in 1 s. The calculated EPR on the HV electrode is 4300 V.

The Surface Potential 9m away from the HV electrode can be calculated using Equation P6.2 as 259V and would be experienced by LV Earth Electrode 1. In the absence of any additional LV earth electrodes this voltage would be propagated through the LV neutral/earth conductor and may be experienced as a Touch Voltage by the dwelling occupants. This potential exceeds the permissible Touch Voltage limit for 1 s of 233 V and so would not be acceptable.

Figure 5.5 shows a second LV electrode (LV Earth Electrode 2) located at the dwelling that is 50m away from the HV electrode. Use of Equation P6.2 provides a calculated Surface Potential of 48V that would be experienced by LV Earth Electrode 2.

Because LV Earth Electrodes 1 and 2 are connected via the LV neutral/earth conductor, and assuming they each have a similar earth resistance, the transfer potential on the LV earthing system (both electrodes and the interconnecting conductor) will be the average of the surface potential calculated at each LV electrode location, i.e. 154 V which is below the permissible Touch Voltage limit.

If the resistance of LV Earth Electrode 2 was half that of LV Earth Electrode 1 the ‘average’ potential will be weighted more towards the potential at LV Electrode 2. From the equation in section 5.3.3(b), the combined potential on the LV earthing system would be (259x1 + 48x2)/3 = 118V.

This rather straightforward example illustrates how the electrode arrangement can be designed to significantly reduce the transfer potential.

Arrangement 2: 33/11kV Substation

A typical 33/11kV Substation earth electrode has been investigated in Case Study 1 and the 30m x 20m 'Basic Grid' had a calculated EPR of 1030V. A fault disconnection time of 0.6s is assumed which has a corresponding permissible Touch Voltage of 420V.

For this case study it is assumed that the dwelling shown in Figure x.x is located 5m from the 33/11kV substation. Using Equation P6.3 the transferred potential to LV Earth Electrode 2 at the dwelling, during a fault at the 33/11kV substation, is 477V. This is in excess of the permissible Touch Voltage limit and may indicate an unacceptable risk to occupants of the dwelling.

Using Equation P6.3 the transferred potential to LV Earth Electrode 1 (located 46m from the 33/11kV substation) can be calculated as 117V. Assuming that the two LV electrodes have a similar earth resistance the average potential transferred to the LV earthing system during an earth fault at the 33/11kV substation is 297V which is below the permissible limit.

Bibliography

Standards publications

EXAMPLE OF REFERENCE TO UK LEGISLATION

[1] GREAT BRITAIN. The Xxxxx Regulations 1992. London: The Stationery Office or HMSO. [SI number or ISBN].

EXAMPLE OF REFERENCE TO EUROPEAN LEGISLATION

[2] EUROPEAN COMMUNITIES. 98/37/EC. Directive xxxxxxxx. Luxembourg: Office for Official Publications of the European Communities, 1998.

EXAMPLE OF REFERENCE TO BOOK

[3] [AUTHOR]. Title. [Reference/identifier]. [Place of publication]: [Publisher], [DATE]. [ISBN].

EXAMPLE OF REFERENCE TO JOURNAL

[4] [AUTHOR]. Title. Journal title, date, volume number [issue number], [page numbers]. [ISBN].

EXAMPLE OF REFERENCE TO WEB DOCUMENT

[5] http://www.samplewebaddress.co.uk

(1986). *A Guide for Assessing the Rise of Earth Potential at Substation Sites.* Energy Networks Association.

(n.d.). *BS 7430.*

(2011). *BS 7430 - Code of practice for protective earthing of electrical installations.* BSI.

(2010). *BS EN 50522 : 2010 - Earthing of power installations exceeding 1 kV a.c.* BSI.

(2010). *BS EN 50522.*

(2010). *BS EN 60909-3 : Short-circuit currents in three-phase a.c systems. Currents during two separate simultaneous line-to-earth short-circuits and partial short-circuit currents flowing through earth.* BSI.

(2010). *BS EN 60909-3.*

(2012). *BS EN 7430 - Code of practice for protective earthing of electrical installations (incorporating corrigendum No. 1), 2011.* BSI.

(1992). *ENA TS 41-24 : Issue 1 - Guidelines For The Design, Installation, Testing And Maintenance Of Main Earthing Systems In Substations.* Energy Networks Association.

(1992). *ENA TS 41-24 : Issue 1.*

Endrenyi, J : Reliability Modelling in Electric Power Systems. (1979). John Wiley & Sons.

(1999). *IEC 60287 - 3-1 Ed 1.1b.*

(1999). IEC 60287-3-1 Ed. 1.1 b : 1999, Electric cables - Calculation of the current rating - Part 3-1: Sections on operating conditions - Reference operating conditions and selection of cable type. International Electrotechnical Commission.

(2007). IEC 60949 Ed. 1.0 b : 1988, Calculation of thermally permissible short-circuit currents, taking into account non-adiabatic heating effects. International Electrotechnical Commission.

(2007). *S36-1 : Identification and Recording of Hot Sites - Joint Electricity / British Telecom Procedure.* Energy Networks Association.

(Endrenyi, J : Reliability Modelling in Electric Power Systems, 1979)

Other publications

(M. Davies, T. Charlton, D. Baudin, ‘New Design Methods to Achieve Greater Safety in Low Voltage Systems During A High Voltage Earth Fault’, CIRED Conference, Frankfurt, June 2011)